JBL PROFESSIONAL

Sound System Design Reference Manual

Table of Contents

Preface i

Chapter 1: Wave Propagation 1-1
Wavelength, Frequency, and Speed of Sound 1-1
Combining Sine Waves 1-2
Combining Delayed Sine Waves 1-3
Diffraction of Sound 1-5
Effects of Temperature Gradients on Sound Propagation 1-6
Effects of Wind Velocity and Gradients on Sound Propagation 1-6
Effect of Humidity on Sound Propagation 1-7

Chapter 2: The Decibel 2-1
Introduction 2-1
Power Relationships 2-1
Voltage, Current, and Pressure Relationships 2-2
Sound Pressure and Loudness Contours 2-4
Inverse Square Relationships 2-6
Adding Power Levels in dB 2-7
Reference Levels 2-7
Peak, Average, and RMS Signal Values 2-8

Chapter 3: Directivity and Angular Coverage of Loudspeakers 3-1
Introduction 3-1
Some Fundamentals 3-1
A Comparison of Polar Plots, Beamwidth Plots, Directivity Plots, and Isobars 3-3
Directivity of Circular Radiators 3-4
The Importance of Flat Power Response 3-6
Measurement of Directional Characteristics 3-7
Using Directivity Information 3-8
Directional Characteristics of Combined Radiators 3-8

Chapter 4: An Outdoor Sound Reinforcement System 4-1
Introduction 4-1
The Concept of Acoustical Gain 4-2
The Influence of Directional Microphones and Loudspeakers on System Maximum Gain 4-3
How Much Gain is Needed? 4-4
Conclusion 4-5

Chapter 5: Fundamentals of Room Acoustics 5-1
Introduction 5-1
Absorption and Reflection of Sound 5-1
The Growth and Decay of a Sound Field in a Room 5-5
Reverberation and Reverberation Time 5-7
Direct and Reverberant Sound Fields 5-12
Critical Distance 5-14
The Room Constant 5-15
Statistical Models and the Real World 5-20

Table of Contents (cont.)

Chapter 6: Behavior of Sound Systems Indoors 6-1
Introduction 6-1
Acoustical Feedback and Potential System Gain 6-2
Sound Field Calculations for a Small Room 6-2
Calculations for a Medium-Size Room 6-5
Calculations for a Distributed Loudspeaker System 6-8
System Gain vs. Frequency Response 6-9
The Indoor Gain Equation 6-9
Measuring Sound System Gain 6-10
General Requirements for Speech Intelligibility 6-11
The Role of Time Delay in Sound Reinforcement 6-16
System Equalization and Power Response of Loudspeakers 6-17
System Design Overview 6-19

Chapter 7: System Architecture and Layout 7-1
Introduction 7-1
Typical Signal Flow Diagram 7-1
Amplifier and Loudspeaker Power Ratings 7-5
Wire Gauges and Line Losses 7-5
Constant Voltage Distribution Systems (70-volt lines) 7-6
Low Frequency Augmentation—Subwoofers 7-6
Case Study A: A Speech and Music System for a Large Evangelical Church 7-9
Case Study B: A Distributed Sound Reinforcement System for a Large Liturgical Church 7-12
Case Study C: Specifications for a Distributed Sound System Comprising a Ballroom, Small Meeting Space, and Social/Bar Area 7-16

Bibliography

Preface to the 1999 Edition:

This third edition of JBL Professional's Sound System Design Reference Manual is presented in a new graphic format that makes for easier reading and study. Like its predecessors, it presents in virtually their original 1977 form George Augspurger's intuitive and illuminating explanations of sound and sound system behavior in enclosed spaces. The section on systems and case studies has been expanded, and references to JBL components have been updated.

The fundamentals of acoustics and sound system design do not change, but system implementation improves in its effectiveness with ongoing developments in signal processing, transducer refinement, and front-end flexibility in signal routing and control.

As stated in the Preface to the 1986 edition: The technical competence of professional dealers and sound contractors is much higher today than it was when the Sound Workshop manual was originally introduced. It is JBL's feeling that the serious contractor or professional dealer of today is ready to move away from simply plugging numbers into equations. Instead, the designer is eager to learn what the equations really mean, and is intent on learning how loudspeakers and rooms interact, however complex that may be. It is for the student with such an outlook that this manual is intended.

John Eargle
January 1999

Chapter 1: Wave Propagation

Wavelength, Frequency, and Speed of Sound

Sound waves travel approximately 344 m/sec (1130 ft/sec) in air. There is a relatively small velocity dependence on temperature, and under normal indoor conditions we can ignore it. Audible sound covers the frequency range from about 20 Hz to 20 kHz. The wavelength of sound of a given frequency is the distance between successive repetitions of the waveform as the sound travels through air. It is given by the following equation:

wavelength = speed/frequency

or, using the common abbreviations of *c* for speed, *f* for frequency, and l for wavelength:

l = c/f

Period (T) is defined as the time required for one cycle of the waveform. T = 1/f.

For f = 1 kHz, T = 1/1000, or 0.001 sec, and l = 344/1000, or .344 m (1.13 ft.)

The lowest audible sounds have wavelengths on the order of 10 m (30 ft), and the highest sounds have wavelengths as short as 20 mm (0.8 in). The range is quite large, and, as we will see, it has great bearing on the behavior of sound.

The waves we have been discussing are of course *sine waves*, those basic building blocks of all speech and music signals. Figure 1-1 shows some of the basic aspects of sine waves. Note that waves of the same frequency can differ in both amplitude and in phase angle. The amplitude and phase angle relationships between sine waves determine how they combine, either acoustically or electrically.

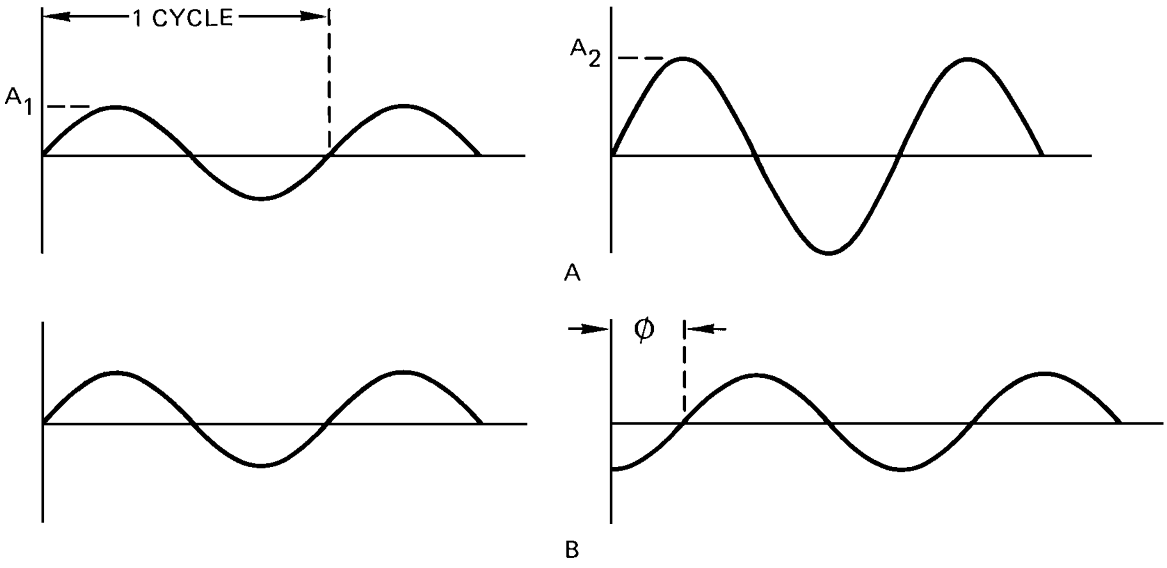

A — TWO SINE WAVES DIFFERING IN AMPLITUDE
B — TWO SINE WAVES DIFFERING IN PHASE RELATIONSHIP

Figure 1-1. Properties of sine waves

Combining Sine Waves

Referring to Figure 1-2, if two or more sine wave signals having the same frequency and amplitude are added, we find that the resulting signal also has the same frequency and that its amplitude depends upon the phase relationship of the original signals. If there is a phase difference of 120°, the resultant has exactly the same amplitude as either of the original signals. If they are combined in phase, the resulting signal has twice the amplitude of either original. For phase differences between l20° and 240°, the resultant signal always has an amplitude less than that of either of the original signals. If the two signals are exactly 180° out of phase, there will be total cancellation.

In electrical circuits it is difficult to maintain identical phase relationships between all of the sine components of more complex signals, except for the special cases where the signals are combined with a 0° or 180° phase relationship. Circuits which maintain some specific phase relationship (45°, for example) over a wide range of frequencies are fairly complex. Such wide range, all-pass phase-shifting networks are used in acoustical signal processing.

When dealing with complex signals such as music or speech, one must understand the concept of *coherence*. Suppose we feed an electrical signal through a high quality amplifier. Apart from very small amounts of distortion, the output signal is an exact replica of the input signal, except for its amplitude. The two signals, although not identical, are said to be highly coherent. If the signal is passed through a poor amplifier, we can expect substantial differences between input and output, and coherence will not be as great. If we compare totally different signals, any similarities occur purely at random, and the two are said to be non-coherent.

When two non-coherent signals are added, the *rms* (root mean square) value of the resulting signal can be calculated by adding the relative powers of the two signals rather than their voltages. For example, if we combine the outputs of two separate noise generators, each producing an rms output of 1 volt, the resulting signal measures 1.414 volts rms, as shown in Figure 1-3.

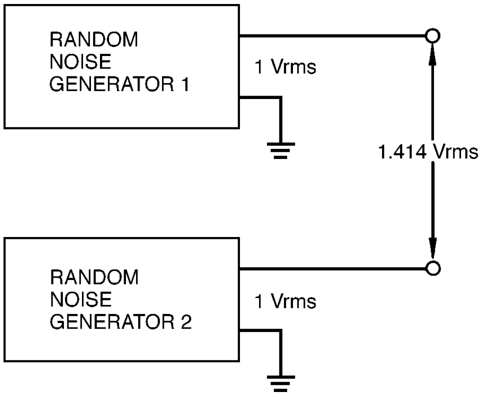

Figure 1-3. Combining two random noise generators

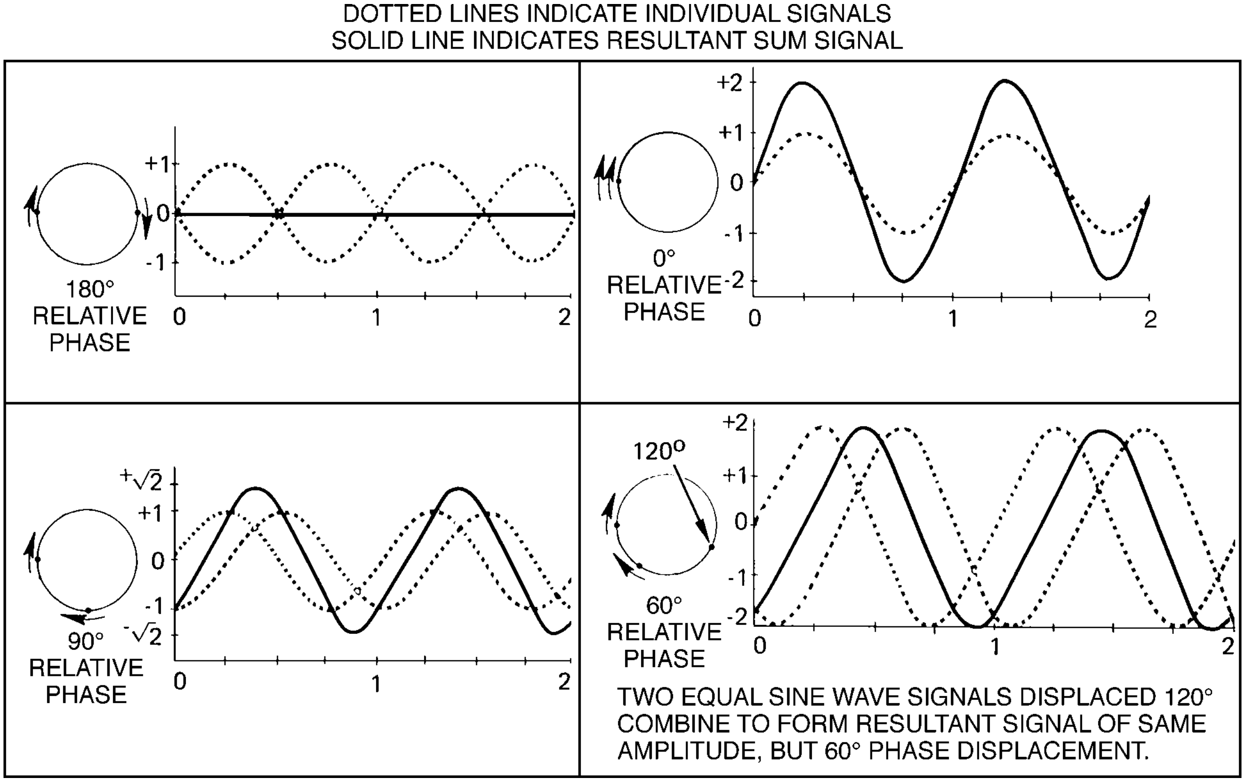

Figure 1-2. V ector addition of two sine waves

Combining Delayed Sine Waves

If two coherent wide-range signals are combined with a specified time difference between them rather than a fixed phase relationship, some frequencies will add and others will cancel. Once the delayed signal arrives and combines with the original signal, the result is a form of "comb filter," which alters the frequency response of the signal, as shown in Figure 1-4. Delay can be achieved electrically through the use of all-pass delay networks or digital processing. In dealing with acoustical signals in air, there is simply no way to avoid delay effects, since the speed of sound is relatively slow.

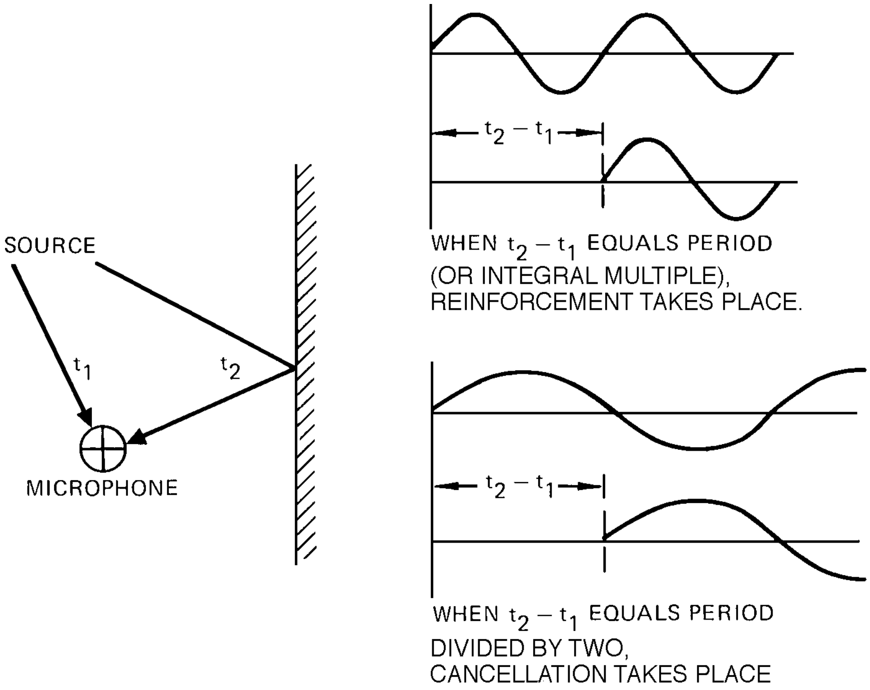

Figure 1-4A. Combining delayed signals

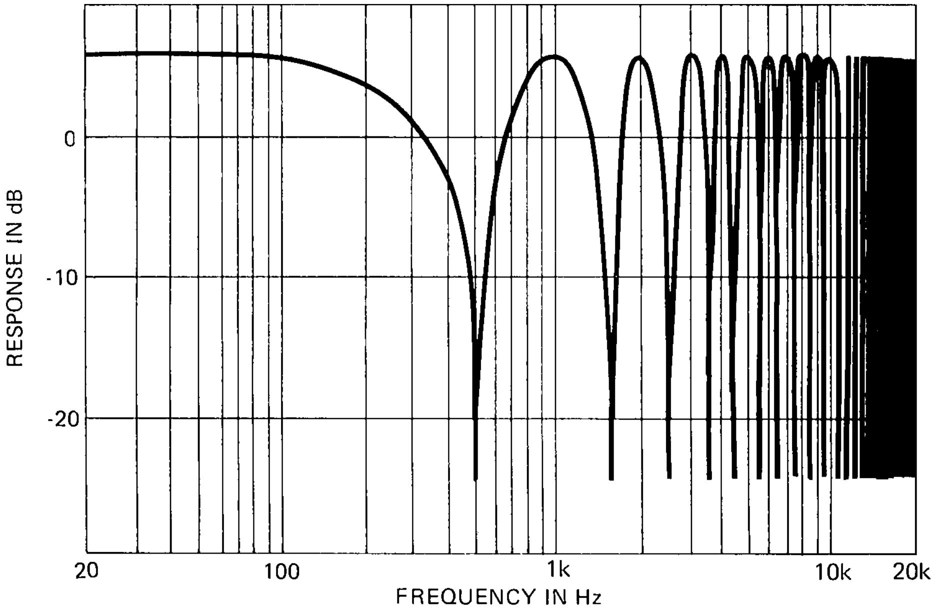

FREQUENCY RESPONSE OF TWO WIDE-RANGE PROGRAM CHANNELS COMBINED WITH ONE MILLISECOND DELAY BETWEEN CHANNELS. SAME PROGRAM SIGNAL FED TO BOTH, EXCEPT THAT AMPLITUDES DIFFER BY 0.5 dB.

Figure 1-4B. Combining of coherent signals with constant time delay

A typical example of combining delayed coherent signals is shown in Figure 1-5. Consider the familiar outdoor PA system in which a single microphone is amplified by a pair of identical separated loudspeakers. Suppose the loudspeakers in question are located at each front corner of the stage, separated by a distance of 6 m (20 ft). At any distance from the stage along the center line, signals from the two loudspeakers arrive simultaneously. But at any other location, the distances of the two loudspeakers are unequal, and sound from one must arrive slightly later than sound from the other. The illustration shows the dramatically different frequency response resulting from a change in listener position of only 2.4 m (8 ft). Using random noise as a test signal, if you walk from Point B to Point A and proceed across the center line, you will hear a pronounced swishing effect, almost like a siren. The change in sound quality is most pronounced near the center line, because in this area the response peaks and dips are spread farther apart in frequency.

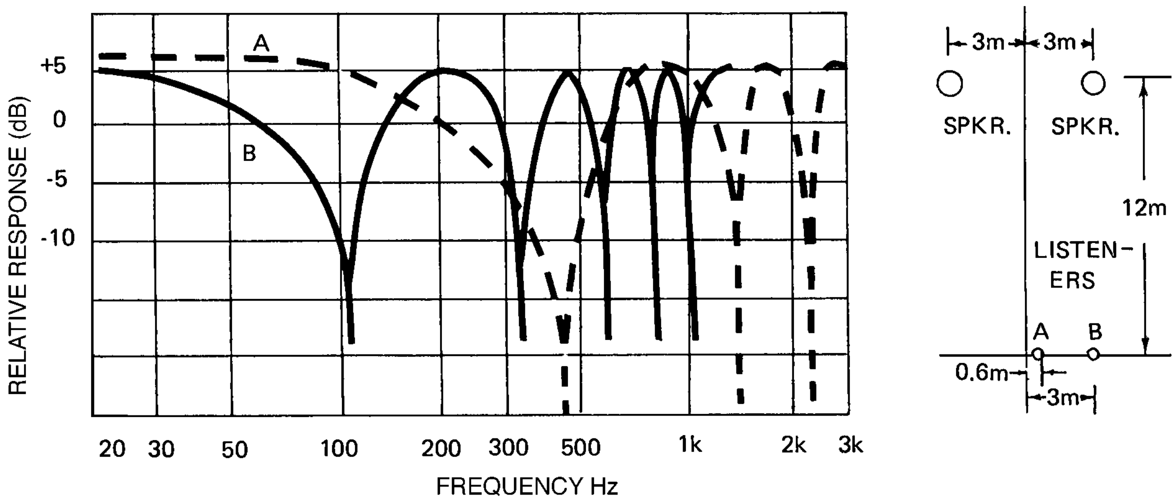

Figure 1-5. Generation of interference effects (comb filter response) by a split array

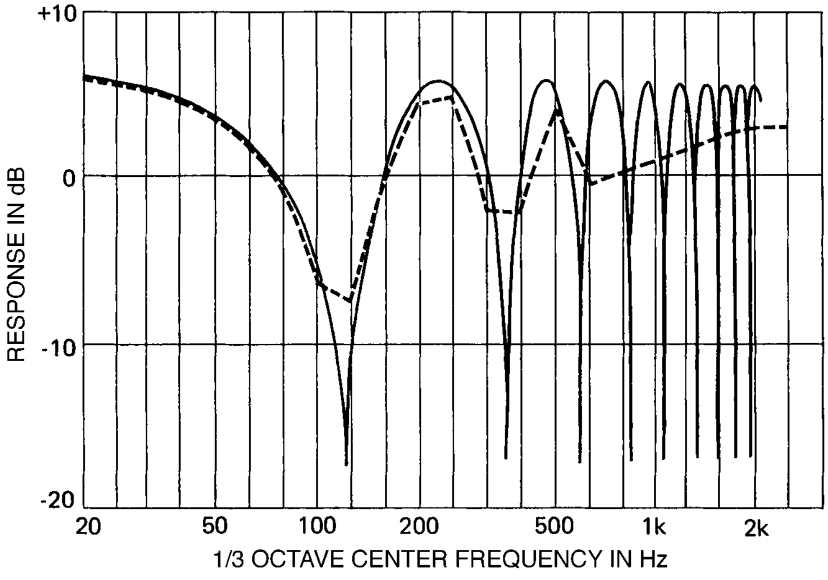

SOLID LINE — MEASURED SINE WAVE FREQUENCY RESPONSE.

DOTTED LINE — 1/3 OCATVE BAND RESPONSE, CLOSELY CORRESPONDING TO SUBJECTIVE TONAL QUALITY WHEN LISTENING TO NORMAL PROGRAM MATERIAL. ABOVE 1 kHz SUBJECTIVE RESPONSE IS ESSENTIALLY FLAT.

Figure 1-6. Audible effect of comb filters shown in Figure 1-5

Subjectively, the effect of such a comb filter is not particularly noticeable on normal program material as long as several peaks and dips occur within each one-third octave band. See Figure 1-6. Actually, the controlling factor is the “critical bandwidth.” In general, amplitude variations that occur within a critical band will not be noticed as such. Rather, the ear will respond to the signal power contained within that band. For practical work in sound system design and architectural acoustics, we can assume that the critical bandwidth of the human ear is very nearly one-third octave wide.

In houses of worship, the system should be suspended high overhead and centered. In spaces which do not have considerable height, there is a strong temptation to use two loudspeakers, one on either side of the platform, feeding both the same program. We do not recommend this.

Diffraction of Sound

Diffraction refers to the bending of sound waves as they move around obstacles. When sound strikes a hard, non-porous obstacle, it may be reflected or diffracted, depending on the size of the obstacle relative to the wavelength. If the obstacle is large compared to the wavelength, it acts as an effective barrier, reflecting most of the sound and casting a substantial “shadow” behind the object. On the other hand, if it is small compared with the wavelength, sound simply bends around it as if it were not there. This is shown in Figure 1-7.

An interesting example of sound diffraction occurs when hard, perforated material is placed in the path of sound waves. So far as sound is concerned, such material does not consist of a solid barrier interrupted by perforations, but rather as an open area obstructed by a number of small individual objects. At frequencies whose wavelengths are small compared with the spacing between perforations, most of the sound is reflected. At these frequencies, the percentage of sound traveling through the openings is essentially proportional to the ratio between open and closed areas.

At lower frequencies (those whose wavelengths are large compared with the spacing between perforations), most of the sound passes through the openings, even though they may account only for 20 or 30 percent of the total area.

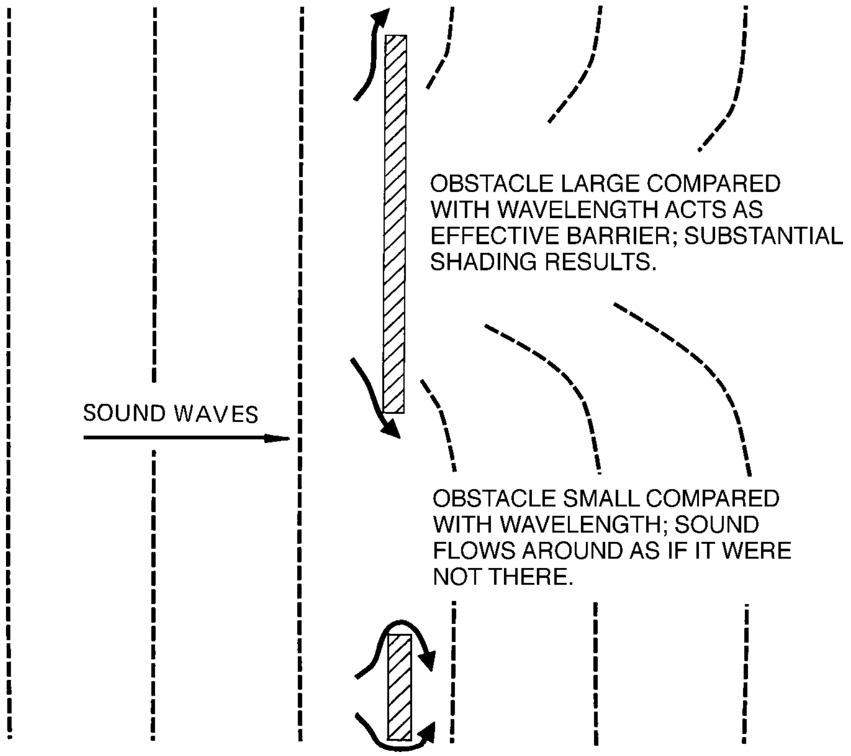

Figure 1-7. Diffraction of sound around obstacles

Effects of Temperature Gradients on Sound Propagation

If sound is propagated over large distances out of doors, its behavior may seem erratic. Differences (gradients) in temperature above ground level will affect propagation as shown in Figure 1-8. Refraction of sound refers to its changing direction as its velocity increases slightly with elevated temperatures. At Figure 1-8A, we observe a situation which often occurs at nightfall, when the ground is still warm. The case shown at *B* may occur in the morning, and its "skipping" characteristic may give rise to hot spots and dead spots in the listening area.

Effects of Wind Velocity and Gradients on Sound Propagation

Figure 1-9 shows the effect wind velocity gradients on sound propagation. The actual velocity of sound in this case is the velocity of sound in still air plus the velocity of the wind itself. Figure 1-10 shows the effect of a cross breeze on the apparent direction of a sound source.

The effects shown in these two figures may be evident at large rock concerts, where the distances covered may be in the 200 - 300 m (600 - 900 ft) range.

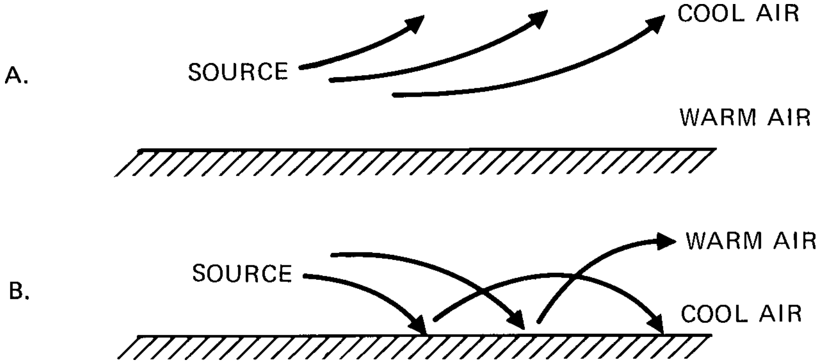

Figure 1-8. Effects of temperature gradients on sound propagation

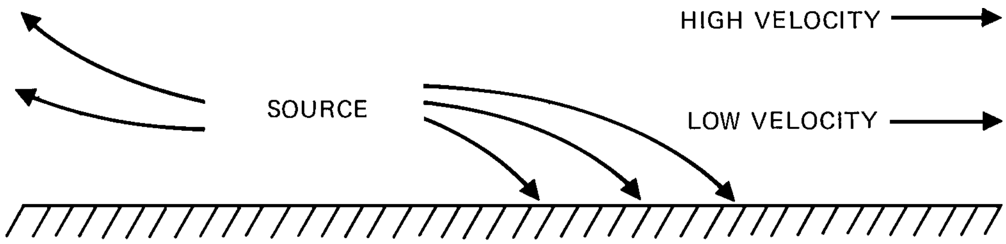

Figure 1-9. Effect of wind velocity gradients on sound propagation

Effects of Humidity on Sound Propagation

Contrary to what most people believe, there is more sound attenuation in dry air than in damp air. The effect is a complex one, and it is shown in Figure 1-11. Note that the effect is significant only at frequencies above 2 kHz. This means that high frequencies will be attenuated more with distance than low frequencies will be, and that the attenuation will be greatest when the relative humidity is 20 percent or less.

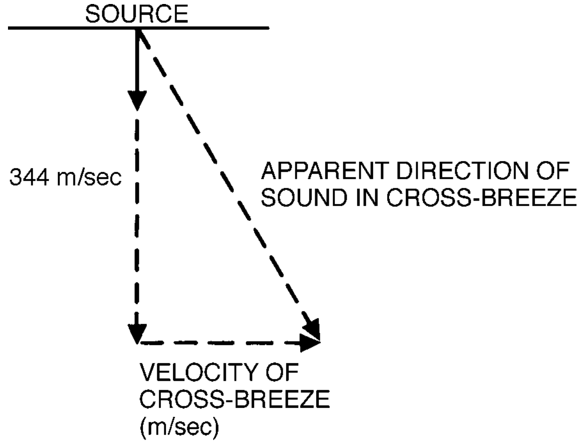

Figure 1-10. Effect of cross breeze on apparent direction of sound

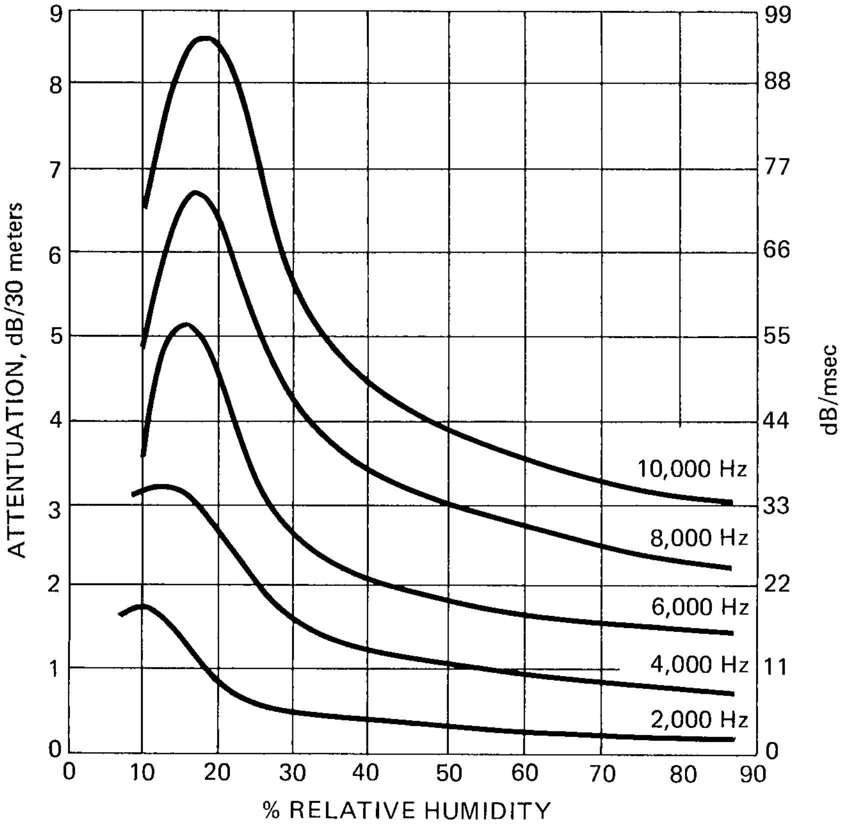

Figure 1-1 1. Absorption of sound in air vs. relative humidity

Chapter 2: The Decibel

Introduction

In all phases of audio technology the decibel is used to express signal levels and level differences in sound pressure, power, voltage, and current. The reason the decibel is such a useful measure is that it enables us to use a comparatively small range of numbers to express large and often unwieldy quantities. The decibel also makes sense from a psychoacoustical point of view in that it relates directly to the effect of most sensory stimuli.

Power Relationships

Fundamentally, the *bel* is defined as the common logarithm of a power ratio:

$$\text{bel} = \log (P_1/P_0)$$

For convenience, we use the *decibel*, which is simply one-tenth bel. Thus:

$$\text{Level in decibels (dB)} = 10 \log (P_1/P_0)$$

The following tabulation illustrates the usefulness of the concept. Letting P_0 = 1 watt:

P_1 (watts)	Level in dB
1	0
10	10
100	20
1000	30
10,000	40
20,000	43

Note that a 20,000-to-1 range in power can be expressed in a much more manageable way by referring to the powers as levels in dB above one watt. Psychoacoustically, a ten-times increase in power results in a level which most people judge to be Òtwice as loud.Ó Thus, a 100-watt acoustical signal would be twice as loud as a 10-watt signal, and a 10-watt signal would be twice as loud as a 1-watt signal. The convenience of using decibels is apparent; each of these power ratios can be expressed by the same level, 10 dB. Any 10 dB level difference, regardless of the actual powers involved, will represent a 2-to-1 difference in subjective loudness.

We will now expand our power decibel table:

P_1 (watts)	Level in dB
1	0
1.25	1
1.60	2
2	3
2.5	4
3.15	5
4	6
5	7
6.3	8
8	9
10	10

This table is worth memorizing. Knowing it, you can almost immediately do mental calculations, arriving at power levels in dB above, or below, one watt.

Here are some examples:

1. What power level is represented by 80 watts? First, locate 8 watts in the left column and note that the corresponding level is 9 dB. Then, note that 80 is *10 times* 8, giving another 10 dB. Thus:

$$9 + 10 = \mathit{19\ dB}$$

2. What power level is represented by 1 milliwatt? 0.1 watt represents a level of minus 10 dB, and 0.01 represents a level 10 dB lower. Finally, 0.001 represents an additional level decrease of 10 dB. Thus:

$$-10 -10 -10 = -30 \text{ dB}$$

3. What power level is represented by 4 milliwatts? As we have seen, the power level of 1 milliwatt is –30 dB. Two milliwatts represents a level increase of 3 dB, and from 2 to 4 milliwatts there is an additional 3 dB level increase. Thus:

$$-30 + 3 + 3 = -24\ dB$$

4. What is the level difference between 40 and 100 watts? Note from the table that the level corresponding to 4 watts is 6 dB, and the level corresponding to 10 watts is 10 dB, a difference of 4 dB. Since the level of 40 watts is 10 dB greater than for 4 watts, and the level of 80 watts is 10 dB greater than for 8 watts, we have:

$$6 - 10 + 10 - 10 = -4\ dB$$

We have done this last example the long way, just to show the rigorous approach. However, we could simply have stopped with our first observation, noting that the dB level difference between 4 and 10 watts, .4 and 1 watt, or 400 and 1000 watts will always be the same, 4 dB, because they all represent the same power ratio.

The level difference in dB can be converted back to a power ratio by means of the following equation:

$$\text{Power ratio} = 10^{dB/10}$$

For example, find the power ratio of a level difference of 13 dB:

$$\text{Power ratio} = 10^{13/10} = 10^{1.3} = 20$$

The reader should acquire a reasonable skill in dealing with power ratios expressed as level differences in dB. A good "feel" for decibels is a qualification for any audio engineer or sound contractor. An extended nomograph for converting power ratios to level differences in dB is given in Figure 2-1.

Voltage, Current, and Pressure Relationships

The decibel fundamentally relates to power ratios, and we can use voltage, current, and pressure ratios as they relate to power. Electrical power can be represented as:

$$P = EI$$

$$P = I^2Z$$

$$P = E^2/Z$$

Because power is proportional to the square of the voltage, the effect of *doubling* the voltage is to *quadruple* the power:

$$(2E)^2/Z = 4(E)^2/Z$$

As an example, let E = 1 volt and Z = 1 ohm. Then, $P = E^2/Z = 1$ watt. Now, let E = 2 volts; then, $P = (2)^2/1 = 4$ watts.

The same holds true for current, and the following equations must be used to express power levels in dB using voltage and current ratios:

$$\text{dB level} = 10 \log\left(\frac{E_1}{E_0}\right)^2 = 20 \log\left(\frac{E_1}{E_0}\right), \text{ and}$$

$$\text{dB level} = 10 \log\left(\frac{I_1}{I_0}\right)^2 = 20 \log\left(\frac{I_1}{I_0}\right).$$

Sound pressure is analogous to voltage, and levels are given by the equation:

$$\text{dB level} = 20 \log\left(\frac{P_1}{P_0}\right).$$

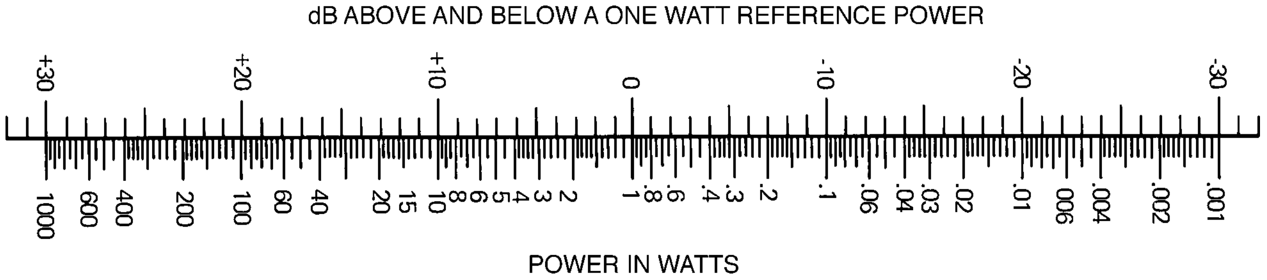

Figure 2-1. Nomograph for determining power ratios directly in dB

The normal reference level for voltage, E_0, is one volt. For sound pressure, the reference is the extremely low value of 20×10^{-6} newtons/m^2. This reference pressure corresponds roughly to the minimum audible sound pressure for persons with normal hearing. More commonly, we state pressure in *pascals* (Pa), where 1 Pa = 1 newton/m^2. As a convenient point of reference, note that an rms pressure of 1 pascal corresponds to a sound pressure level of 94 dB.

We now present a table useful for determining levels in dB for ratios given in voltage, current, or sound pressure:

Voltage, Current or Pressure Ratios	Level in dB
1	0
1.25	2
1.60	4
2	6
2.5	8
3.15	10
4	12
5	14
6.3	16
8	18
10	20

This table may be used exactly the same way as the previous one. Remember, however, that the reference impedance, whether electrical or acoustical, must remain fixed when using these ratios to determine level differences in dB. A few examples are given:

1. Find the level difference in dB between 2 volts and 10 volts. Directly from the table we observe

20 – 6 = *14 dB*.

2. Find the level difference between 1 volt and 100 volts. A 10-to-1 ratio corresponds to a level difference of 20 dB. Since 1-to-100 represents the product of *two* such ratios (1-to-10 and 10-to-100), the answer is

20 + 20 = 40 dB.

3. The signal input to an amplifier is 1 volt, and the input impedance is 600 ohms. The output is also 1 volt, and the load impedance is 15 ohms. What is the gain of the amplifier in dB? Watch this one carefully!

If we simply compare input and output voltages, we still get 0 dB as our answer. The *voltage gain* is in fact unity, or one. Recalling that decibels refer primarily to power ratios, we must take the differing input and output impedances into account and actually compute the input and output powers.

$$\text{Input power} = \frac{E^2}{Z} = \frac{1}{600}\ \text{watt}$$

$$\text{Output power} = \frac{E^2}{Z} = \frac{1}{15}$$

$$\text{Thus, } 10 \log\left(\frac{600}{15}\right) = 10 \log 40 = 16\ \text{dB}$$

Fortunately, such calculations as the above are not often made. In audio transmission, we keep track of operating levels primarily through voltage level calculations in which the voltage reference value of 0.775 volts has an assigned level of 0 dBu. The value of 0.775 volts is that which is applied to a 600-ohm load to produce a power of 1 milliwatt (mW). A power level of 0 dBm corresponds to 1 mW. Stated somewhat differently, level values in dBu and dBm will have the same numerical value only when the load impedance under consideration is 600 ohms.

The level difference in dB can be converted back to a voltage, current, or pressure ratio by means of the following equation:

$$\text{Ratio} = 10^{dB/20}$$

For example, find the voltage ratio corresponding to a level difference of 66 dB:

$$\text{voltage ratio} = 10^{66/20} = 10^{3.3} = 2000.$$

Sound Pressure and Loudness Contours

We will see the term dB-SPL time and again in professional sound work. It refers to sound pressure levels in dB above the reference of 20 x 10^{-6} N/m^2. We commonly use a *sound level meter* (SLM) to measure SPL. Loudness and sound pressure obviously bear a relation to each other, but they are not the same thing. Loudness is a subjective sensation which differs from the measured level in certain important aspects. To specify loudness in scientific terms, a different unit is used, the *phon*. Phons and decibels share the same numerical value only at 1000 Hz. At other frequencies, the phon scale deviates more or less from the sound level scale, depending on the particular frequency and the sound pressures; Figure 2-2 shows the relationship between phons and decibels, and illustrates the well-known Robinson-Dadson equal loudness contours. These show that, in general, the ear becomes less sensitive to sounds at low frequencies as the level is reduced.

When measuring sound pressure levels, weighted response may be employed to more closely approximate the response of the ear. Working with sound systems, the most useful scales on the sound level meter will be the A-weighting scale and the linear scale, shown in Figure 2-3. Inexpensive sound level meters, which cannot provide linear response over the full range of human hearing, often have no linear scale but offer a C-weighting scale instead. As can be seen from the illustration, the C-scale rolls off somewhat at the frequency extremes. Precision sound level meters normally offer *A, B,* and *C* scales in addition to linear response. Measurements made with a sound level meter are normally identified by noting the weighting factor, such as: dB(A) or dB(lin).

Typical levels of familiar sounds, as shown in Figure 2-4, help us to estimate dB(A) ratings when a sound level meter is not available. For example, normal conversational level in quiet surrounds is about 60 dB(A). Most people find levels higher than 100 dB(A) uncomfortable, depending on the length of exposure. Levels much above 120 dB(A) are definitely dangerous to hearing and are perceived as painful by all except dedicated rock music fans.

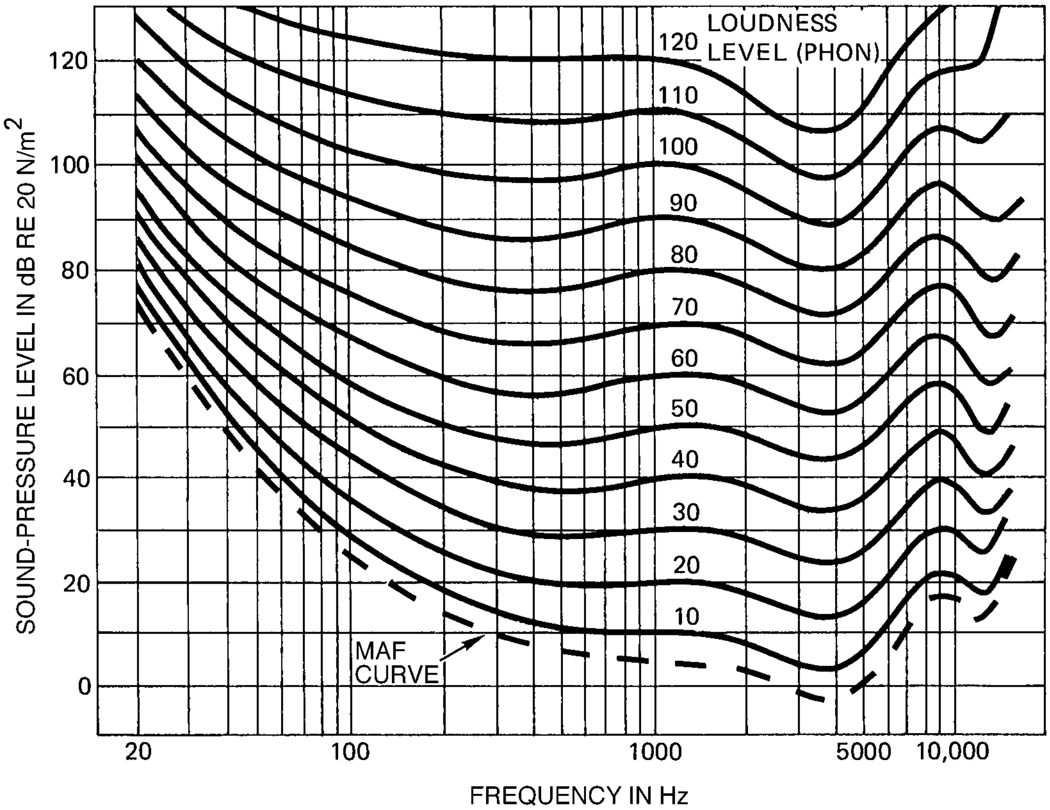

Figure 2-2. Free-field equal loudness contours

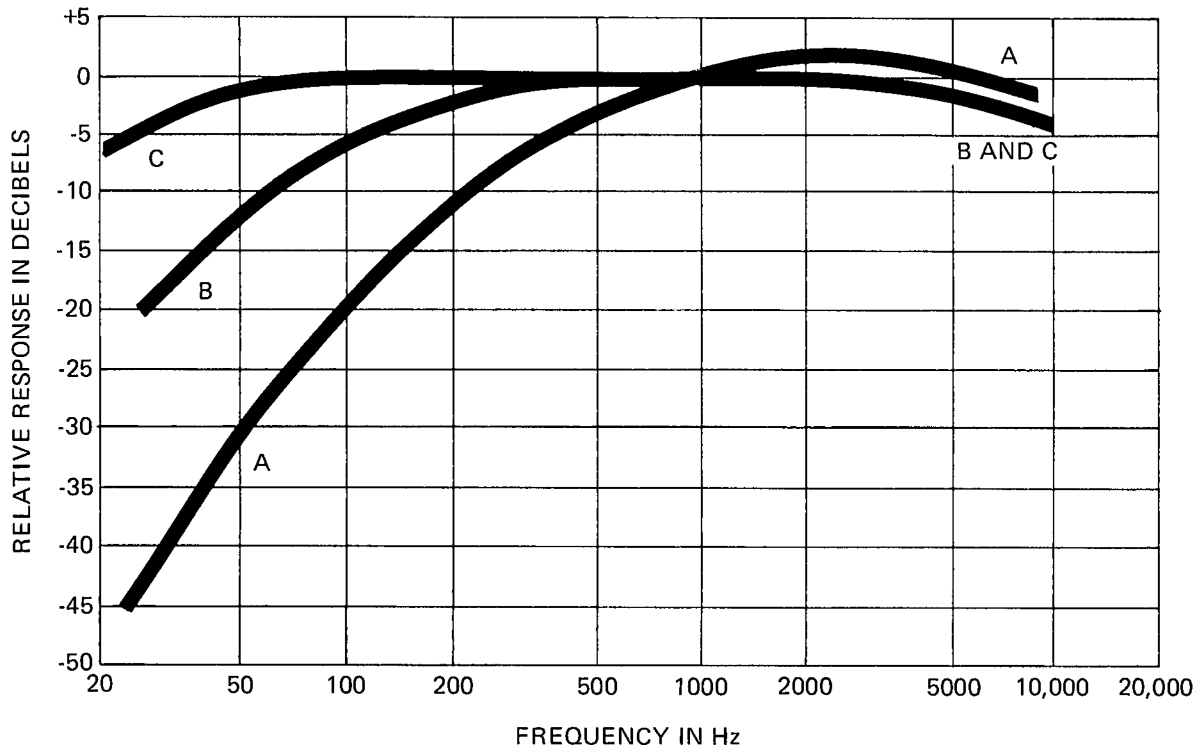

Figure 2-3. Frequency responses for SLM weighting characteristics

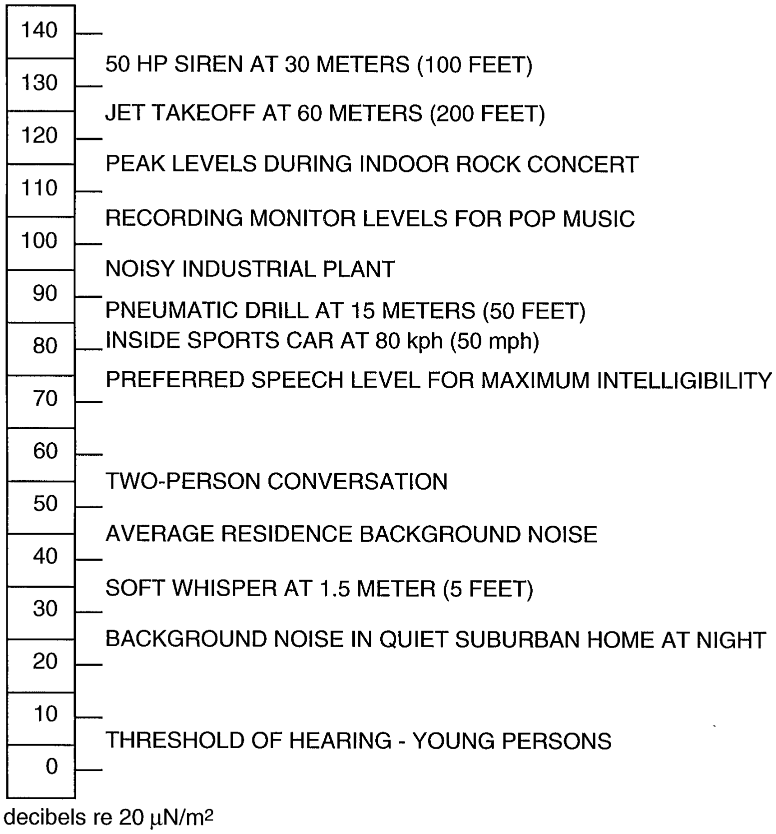

Figure 2-4. Typical A-weighted sound levels

Inverse Square Relationships

When we move away from a *point source* of sound out of doors, or in a *free field*, we observe that SPL falls off almost exactly 6 dB for each doubling of distance away from the source. The reason for this is shown in Figure 2-5. At A there is a sphere of radius one meter surrounding a point source of sound P_1 representing the SPL at the surface of the sphere. At B, we observe a sphere of twice the radius, 2 meters. The area of the larger sphere is *four times* that of the smaller one, and this means that the acoustical power passing through a small area on the larger sphere will be *one-fourth* that passing through the same small area on the smaller sphere. The 4-to-1 power ratio represents a level difference of 6 dB, and the corresponding sound pressure ratio will be 2-to-1.

A convenient nomograph for determining inverse square losses is given in Figure 2-6. Inverse square calculations depend on a theoretical point source in a free field. In the real world, we can closely approach an ideal free field, but we still must take into account the factors of finite source size and non-uniform radiation patterns.

Consider a horn-type loudspeaker having a rated sensitivity of 100 dB, 1 watt at 1 meter. One meter from where? Do we measure from the mouth of the horn, the throat of the horn, the driver diaphragm, or some indeterminate point in between? Even if the measurement position is specified, the information may be useless. Sound from a finite source does not behave according to inverse square law at distances close to that source. Measurements made in the "near field" cannot be used to estimate performance at greater distances. This being so, one may well wonder why loudspeakers are rated at a distance of only 1 meter.

The method of rating and the accepted methods of measuring the devices are two different things. The manufacturer is expected to make a number of measurements at various distances under free field conditions. From these he can establish

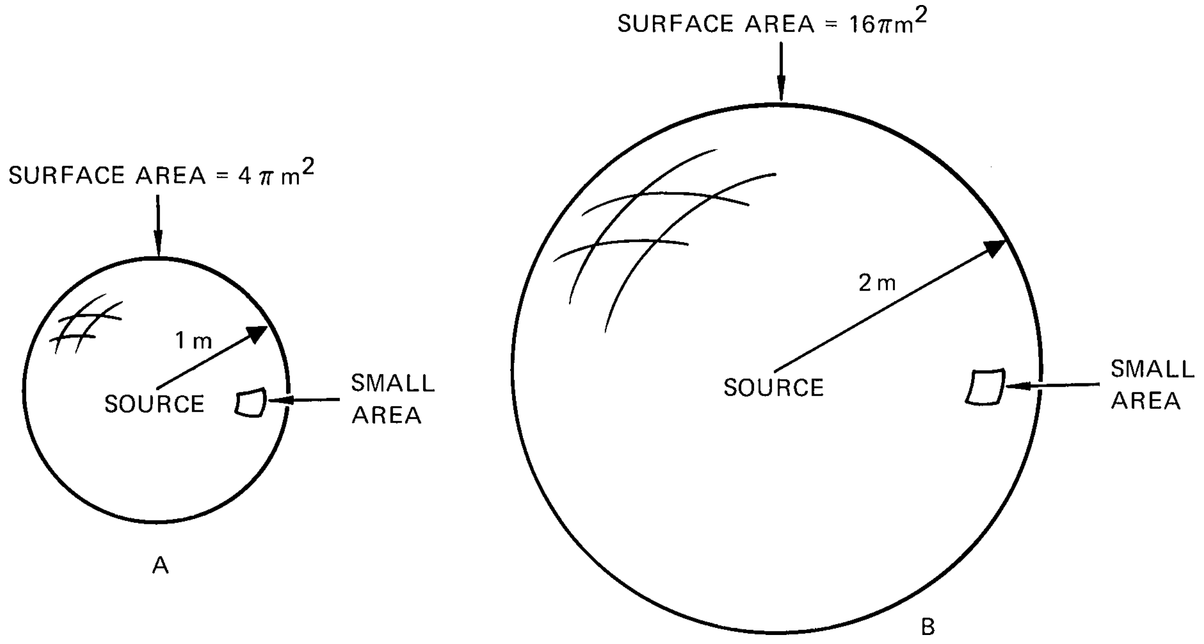

Figure 2-5. Inverse square relationships

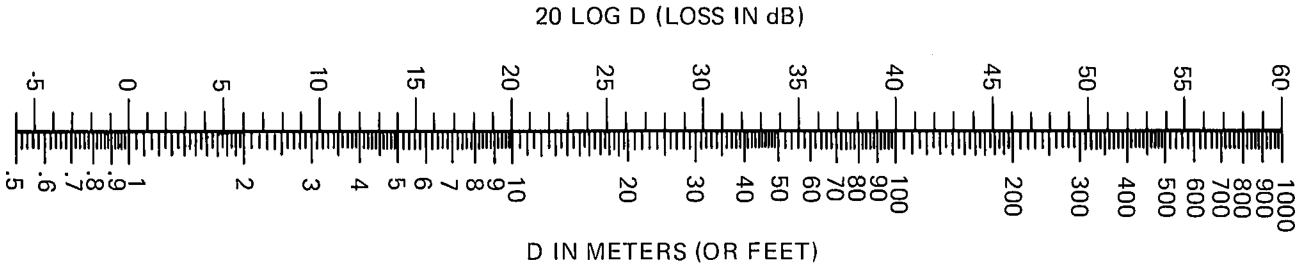

Figure 2-6. Nomograph for determining inverse square losses

that the measuring microphone is far enough away from the device to be in its *far field*, and he can also calculate the imaginary point from which sound waves diverge, according to inverse square law. This point is called the *acoustic center* of the device. After accurate field measurements have been made, the results are converted to an equivalent one meter rating. The rated sensitivity at one meter is that SPL which would be measured if the inverse square relationship were actually maintained that close to the device.

Let us work a few exercises using the nomograph of Figure 2-6:

1. A JBL model 2360 horn with a 2446 HF driver produces an output of 113 dB, 1 watt at 1 meter. What SPL will be produced by 1 watt at 30 meters? We can solve this by inspection of the nomograph. Simply read the difference in dB between 1 meter and 30 meters: 29.5 dB. Now, subtracting this from 113 dB:

$$113 - 29.5 = 83.5 \text{ dB}$$

2. The nominal power rating of the JBL model 2446 driver is 100 watts. What maximum SPL will be produced at a distance of 120 meters in a free field when this driver is mounted on a JBL model 2366 horn?

There are three simple steps in solving this problem. First, determine the inverse square loss from Figure 2-6; it is approximately 42 dB. Next, determine the level difference between one watt and 100 watts. From Figure 2-1 we observe this to be 20 dB. Finally, note that the horn-driver sensitivity is 118 dB, 1 watt at 1 meter. Adding these values:

$$118 - 42 + 20 = 96 \text{ dB-SPL}$$

Calculations such as these are very commonplace in sound reinforcement work, and qualified sound contractors should be able to make them easily.

Adding Power Levels in dB

Quite often, a sound contractor will have to add power levels expressed in dB. Let us assume that two sound fields, each 94 dB-SPL, are combined. What is the resulting level? If we simply add the levels numerically, we get 188 dB-SPL, clearly an absurd answer! What we must do in effect is convert the levels back to their actual powers, add them, and then recalculate the level in dB. Where two levels are involved, we can accomplish this easily with the data of Figure 2-7. Let *D* be the difference in dB between the two levels, and determine the value *N* corresponding to this difference. Now, add *N* to the *higher* of the two original values.

As an exercise, let us add two sound fields, 90 dB-SPL and 84 dB-SPL. Using Figure 2-7, a *D* of 6 dB corresponds to an *N* of about 1 dB. Therefore, the new level will be 91 dB-SPL.

Note that when two levels differ by more than about 10 dB, the resulting summation will be substantially the same as the higher of the two values. The effect of the lower level will be negligible.

Reference Levels

Although we have discussed some of the common reference levels already, we will list here all of those that a sound contractor is likely to encounter.

In acoustical measurements, *SPL* is always measured relative to 20 x 10^{-6} Pa. An equivalent expression of this is .0002 dynes/cm^2.

In broadcast transmission work, power is often expressed relative to 1 milliwatt (.001 watt), and such levels are expressed in *dBm*.

The designation *dBW* refers to levels relative to one watt. Thus, 0 dBW = 30 dBm.

In signal transmission diagrams, the designation *dBu* indicates voltage levels referred to .775 volts.

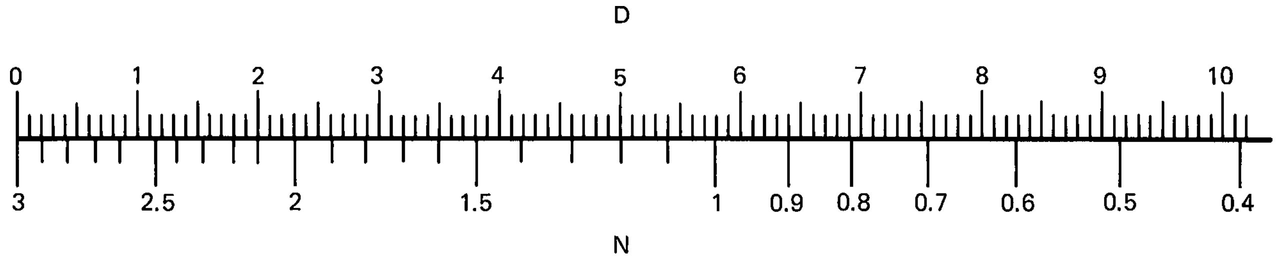

Figure 2-7. Nomograph for adding levels expressed in dB. Summing sound level output of two sound sources where D is their output difference in dB. N is added to the higher to derive the total level.

In other voltage measurements, *dBV* refers to levels relative to 1 volt.

Rarely encountered by the sound contractor will be acoustical power levels. These are designated dB-PWL, and the reference power is 10^{-12} watts. This is a very small power indeed. It is used in acoustical measurements because such small amounts of power are normally encountered in acoustics.

Peak, Average, and *rms* Signal Values

Most measurements of voltage, current, or sound pressure in acoustical engineering work are given as *rms* (root mean square) values of the waveforms. The rms value of a repetitive waveform equals its equivalent DC value in power transmission. Referring to Figure 2-8A for a sine wave with a peak value of one volt, the rms value is .707 volt, a 3 dB difference. The average value of the waveform is .637 volt.

For more complex waveforms, such as are found in speech and music, the peak values will be considerably higher than the average or rms values. The waveform shown at Figure 2-8B is that of a trumpet at about 400 Hz, and the spread between peak and average values is 13 dB.

In this chapter, we have in effect been using rms values of voltage, current, and pressure for all calculations. However, in all audio engineering applications, the time-varying nature of music and speech demands that we consider as well the instantaneous values of waveforms likely to be encountered. The term *headroom* refers to the extra margin in dB designed into a signal transmission system over its normal operating level. The importance of headroom will become more evident as our course develops.

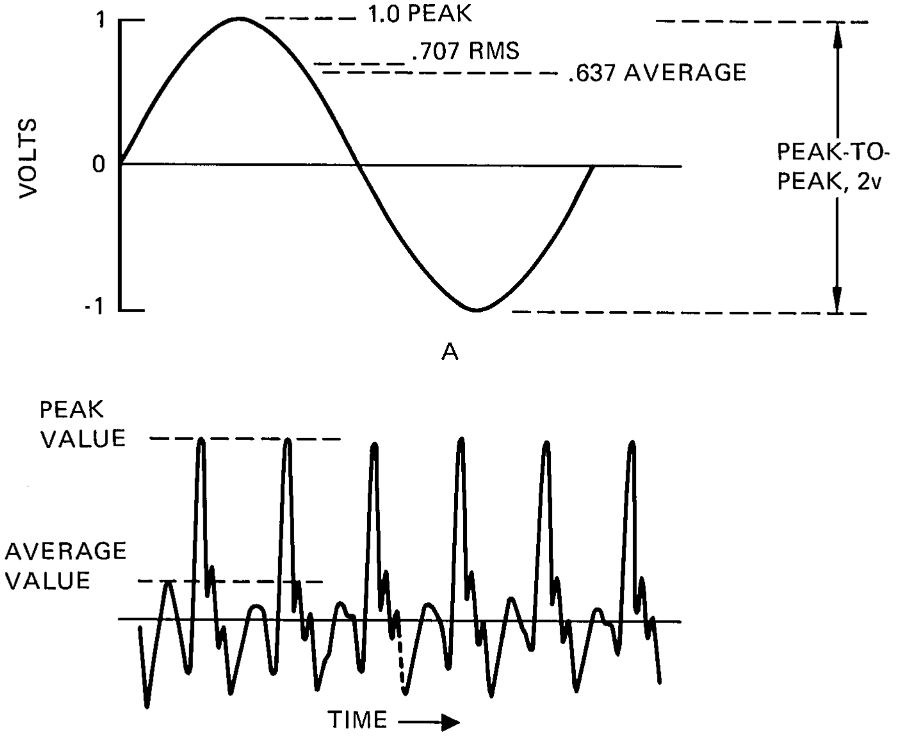

Waveform of a trumpet tone (about 400 Hz). The spread between average and peak values of the waveform is 13 dB.

B

Figure 2-8. Peak, average, and rms values. Sinewave (A); complex waveform (B).

Chapter 3: Directivity and Angular Coverage of Loudspeakers

Introduction

Proper coverage of the audience area is one of the prime requirements of a sound reinforcement system. What is required of the sound contractor is not only a knowledge of the directional characteristics of various components but also how those components may interact in a multi-component array. Such terms as directivity index (DI), directivity factor (Q), and beamwidth all variously describe the directional properties of transducers with their associated horns and enclosures. Detailed polar data, when available, gives the most information of all. In general, no one has ever complained of having too much directivity information. In the past, most manufacturers have supplied too little; however, things have changed for the better in recent years, largely through data standardization activities on the part of the Audio Engineering Society.

Some Fundamentals

Assume that we have an omnidirectional radiator located in free space and that there is a microphone at some fixed distance from it. This is shown in Figure 3-1A. Let the power radiated from the loudspeaker remain constant, and note the SPL at the mcrophone. Now, as shown at *B*, let us place a large reflecting boundary next to the source, cutting the radiation solid angle in half. We then note the SPL at the microphone has increased 6 dB, due to the "pressure doubling" effect of a reflected image of the source produced by the plane. We continue the process of successively halving the radiation solid angle at *C* and *D*, noting that, each time we do this, the level at the microphone increases 6 dB. Another way to view this phenomenon is to observe that, for each halving of the radiation solid angle, the source radiation impedance has been halved,

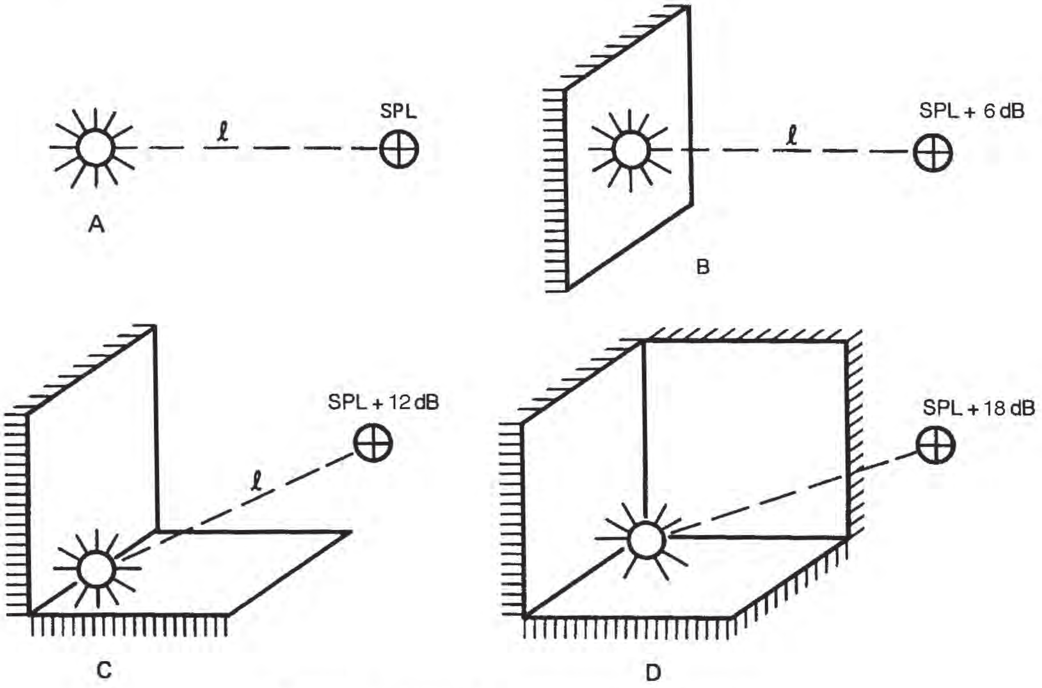

Figure 3-1. Directivity and angular coverage

causing a *doubling* of acoustical power. At the same time, the halving of the solid radiation angle causes a *doubling* of the directivity factor. Each of these effects results in a 3-dB increase in level, and thus a total 6 dB increase in SPL for each halving of the solid radiation angle will be observed. In going from A to D in successive steps we have increased the directivity index by 3 dB and doubled the directivity factor at each step.

Directivity index (DI) can be defined as the level difference along a given axis, and at a given distance, from a sound radiator compared to the intensity that would be produced by an omnidirectional source radiating the same power. Directivity factor (Q) is the ratio of the two values of intensity. These are shown graphically in Figure 3-2. *DI* and *Q* are related as follows:

$$DI = 10 \log Q$$

$$Q = 10^{DI/10}$$

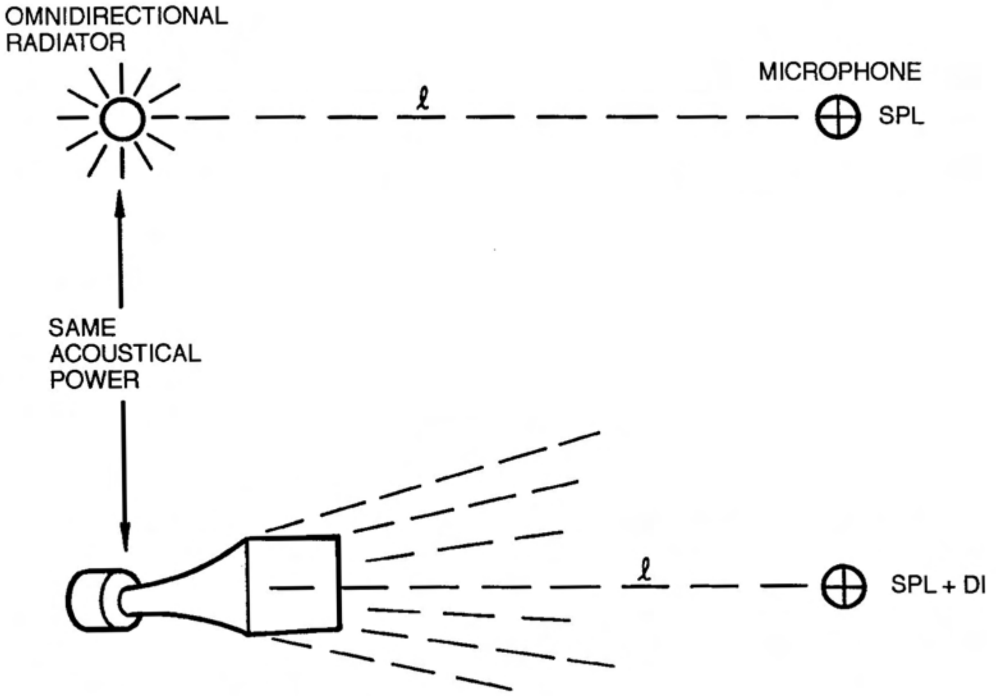

Figure 3-2. Directivity index and directivity factor

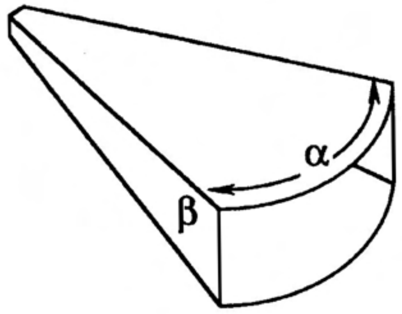

$$DI = 10 \log \left[\frac{180°}{\arcsin(\sin \alpha/2 \cdot \sin \beta/2)} \right]$$

$$Q = \frac{180°}{\arcsin(\sin \alpha/2 \cdot \sin \beta/2)}$$

Figure 3-3. Illustration of Molloy's equation

The data of Figure 3-1 was generalized by Molloy (7) and is shown in Figure 3-3. Here, note that DI and Q are related to the solid angular coverage of a hypothetical sound radiator whose horizontal and vertical coverage angles are specified. Such ideal sound radiators do not exist, but it is surprising how closely these equations agree with measured DI and Q of HF horns that exhibit fairly steep cut-off outside their normal coverage angles.

As an example of this, a JBL model 2360 Bi-Radial horn has a nominal 90°-by-40° pattern measured between the 6 dB down points in each plane. If we insert the values of 90° and 40° into Molloy's equation, we get DI = 11 and Q = 12.8. The published values were calculated by integrating response over 360° in both horizontal and vertical planes, and they are DI = 10.8 and Q = 12.3. So the estimates are in excellent agreement with the measurements.

For the JBL model 2366 horn, with its nominal 6 dB down coverage angles of 40° and 20°, Molloy's equation gives DI = 17.2 and Q = 53. The published values are DI = 16.5 and Q = 46. Again, the agreement is excellent.

Is there always such good correlation between the 6 dB down horizontal and vertical beamwidth of a horn and its calculated directivity? The answer is *no*. Only when the response cut-off is sharp beyond the 6 dB beamwidth limits and when there is minimal radiation outside rated beamwidth will the correlation be good. For many types of radiators, especially those operating at wavelengths large compared with their physical dimensions, Molloy's equation will not hold.

A Comparison of Polar Plots, Beamwidth Plots, Directivity Plots, and Isobars

There is no one method of presenting directional data on radiators which is complete in all regards. Polar plots (Figure 3-4A) are normally presented in only the horizontal and vertical planes. A single polar plot covers only a single frequency, or frequency band, and a complete set of polar plots takes up considerable space. Polars are, however, the only method of presentation giving a clear picture of a radiator's response outside its normal operating beamwidth. Beamwidth plots of the 6 dB down coverage angles (Figure 3-4B) are very common because considerable information is contained in a single plot. By itself, a plot of DI or Q conveys information only about the on-axis performance of a radiator (Figure 3-4C). Taken together, horizontal and vertical beamwidth plots and DI or Q plots convey sufficient information for most sound reinforcement design requirements.

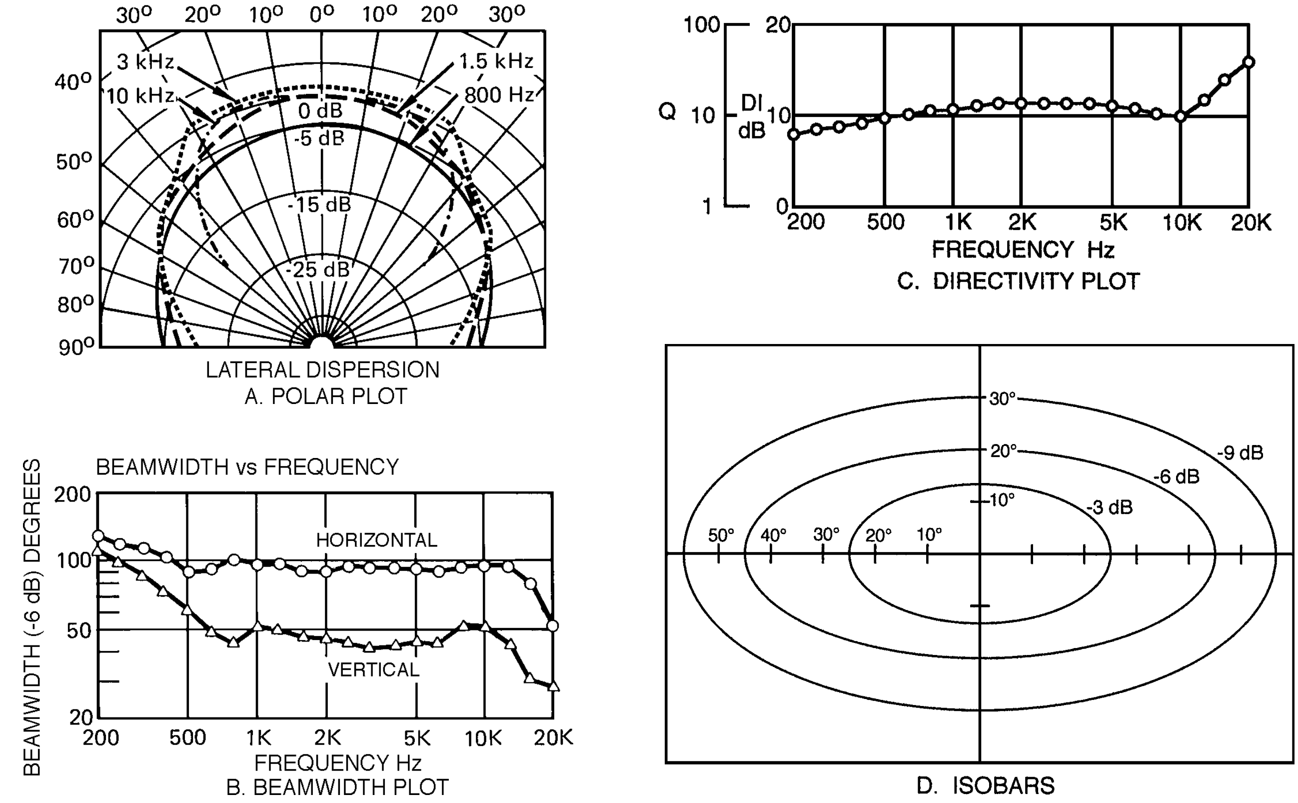

Figure 3-4. Methods of presenting directional information

Isobars have become popular in recent years. They give the angular contours in spherical coordinates about the principal axis along which the response is -3, -6, and -9 dB, relative to the on-axis maximum. It is relatively easy to interpolate visually between adjacent isobars to arrive at a reasonable estimate of relative response over the useful frontal solid radiation angle of the horn. Isobars are useful in advanced computer layout techniques for determining sound coverage over entire seating areas. The normal method of isobar presentation is shown in Figure 3-4D.

Still another way to show the directional characteristics of radiators is by means of a family of off-axis frequency response curves, as shown in Figure 3-5. At *A*, note that the off-axis response curves of the JBL model 2360 Bi-Radial horn run almost parallel to the on-axis response curve. What this means is that a listener seated off the main axis will perceive smooth response when a Bi-Radial constant coverage horn is used. Contrast this with the off-axis response curves of the older (and obsolete) JBL model 2350 radial horn shown at *B*. If this device is equalized for flat on-axis response, then listeners off-axis will perceive rolled-off HF response.

Directivity of Circular Radiators

Any radiator has little directional control for frequencies whose wavelengths are large compared with the radiating area. Even when the radiating area is large compared to the wavelength, constant pattern control will not result unless the device has been specifically designed to maintain a constant pattern. Nothing demonstrates this better than a simple radiating piston. Figure 3-6 shows the sharpening of on-axis response of a piston mounted in a flat baffle. The wavelength varies over a 24-to-1 range. If the piston were, say a 300 mm (12”) loudspeaker, then the wavelength illustrated in the figure would correspond to frequencies spanning the range from about 350 Hz to 8 kHz.

Among other things, this illustration points out why “full range,” single-cone loudspeakers are of little use in sound reinforcement engineering. While the on-axis response can be maintained through equalization, off-axis response falls off drastically above the frequency whose wavelength is about equal to the diameter of the piston. Note that when the diameter equals the wavelength, the radiation pattern is approximately a 90° cone with - 6 dB response at ±45°.

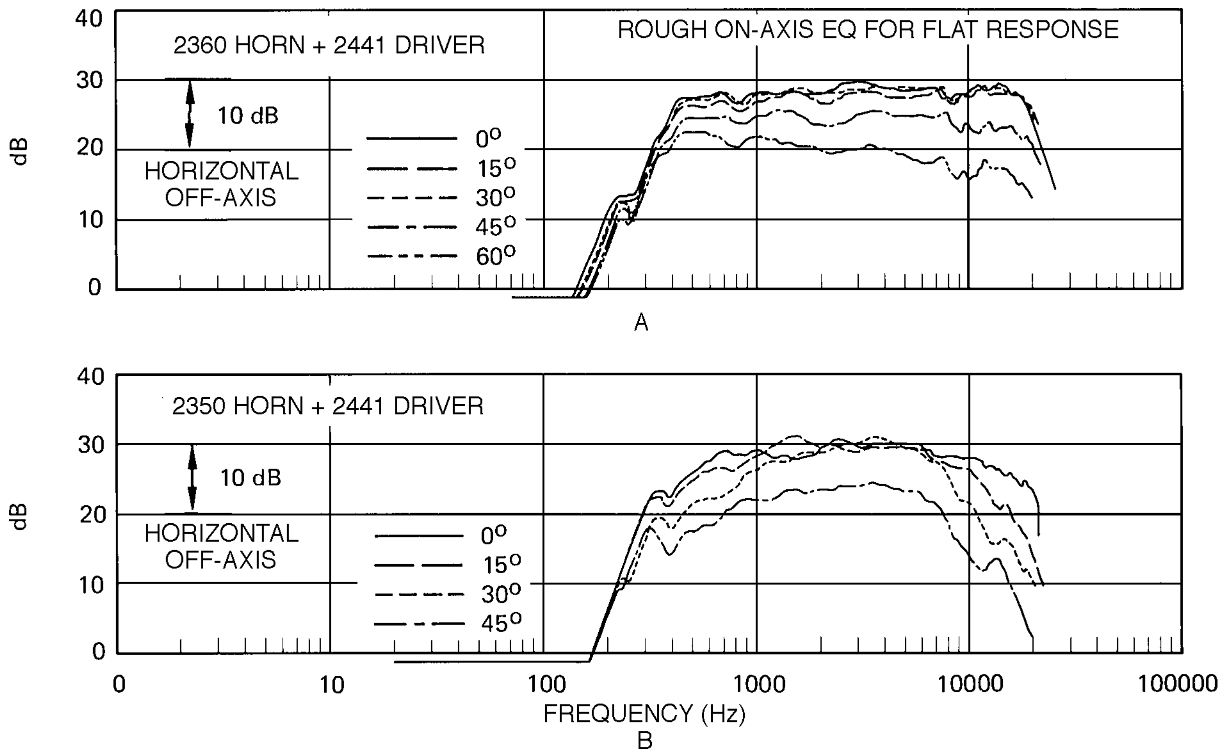

Figure 3-5. Families of off-axis frequency response curves

The values of DI and Q given in Figure 3-6 are the on-axis values, that is, along the axis of maximum loudspeaker sensitivity. This is almost always the case for published values of DI and Q. However, values of DI and Q exist along *any* axis of the radiator, and they can be determined by inspection of the polar plot. For example, in Figure 3-6, examine the polar plot corresponding to Diameter = l. Here, the on-axis DI is 10 dB. If we simply move off-axis to a point where the response has dropped 10 dB, then the DI along that direction will be 10 - 10, or 0 dB, and the Q will be unity. The off-axis angle where the response is 10 dB down is marked on the plot and is at about 55°. Normally, we will not be concerned with values of DI and Q along axes other than the principal one; however, there are certain calculations involving interaction of microphones and loudspeakers where a knowledge of off-axis directivity is essential.

Omnidirectional microphones with circular diaphragms respond to on- and off-axis signals in a manner similar to the data shown in Figure 3-6. Let us assume that a given microphone has a diaphragm about 25 mm (1") in diameter. The frequency corresponding to l/4 is about 3500 Hz, and the response will be quite smooth both on and off axis. However, by the time we reach 13 or 14 kHz, the diameter of the diaphragm is about equal to l, and the DI of the microphone is about 10 dB. That is, it will be 10 dB more sensitive to sounds arriving on axis than to sounds which are randomly incident to the microphone.

Of course, a piston is a very simple radiator — or receiver. Horns such as JBL's Bi-Radial series are complex by comparison, and they have been designed to maintain constant HF coverage through attention to wave-guide principles in their design. One thing is certain: no radiator can exhibit much pattern control at frequencies whose wavelengths are much larger than the circumference of the radiating surface.

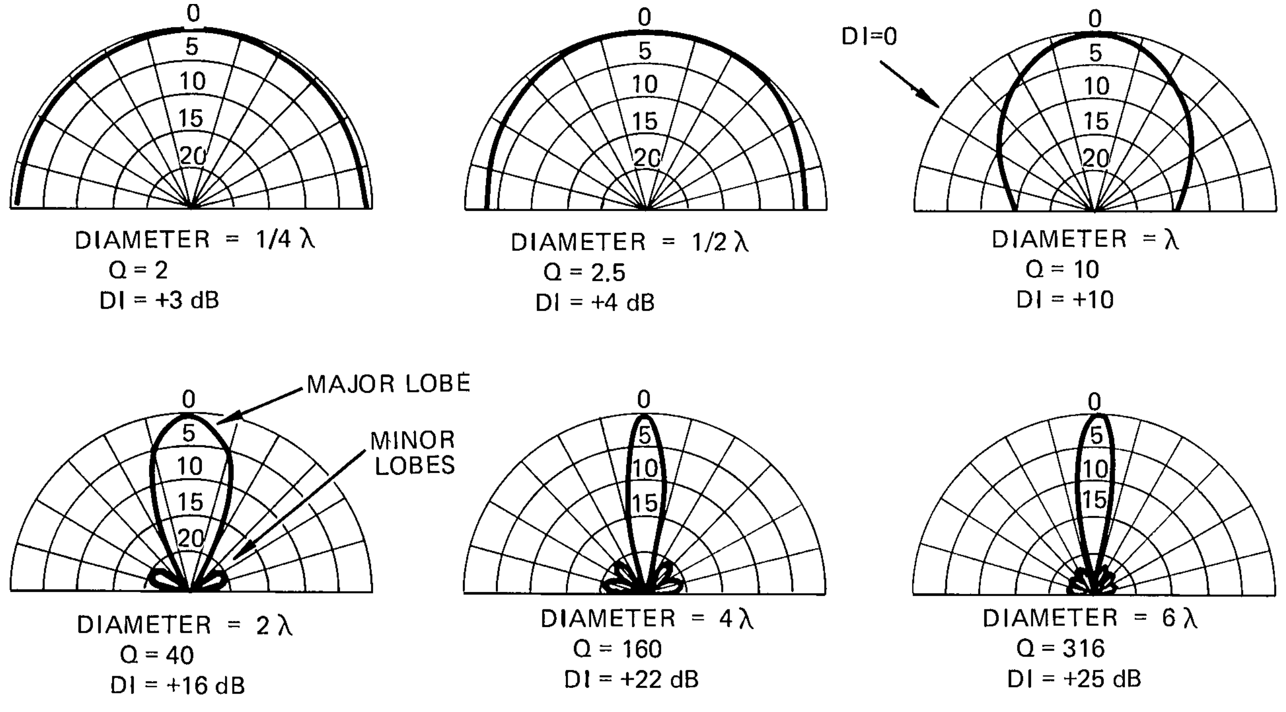

Figure 3-6. Directional characteristics of a circular-piston source mounted in an infinite baffle as a function of diameter and l.

The Importance of Flat Power Response

If a radiator exhibits flat power response, then the power it radiates, integrated over all directions, will be constant with frequency. Typical compression drivers inherently have a rolled-off response when measured on a *plane wave tube* (PWT), as shown in Figure 3-7A. When such a driver is mounted on a typical radial horn such as the JBL model 2350, the on-axis response of the combination will be the sum of the PWT response and the DI of the horn. Observe at *B* that the combination is fairly flat on axis and does not need additional equalization. Off-axis response falls off, both vertically and horizontally, and the total power response of the combination will be the same as observed on the PWT; that is, it rolls off above about 3 kHz.

Now, let us mount the same driver on a Bi-Radial uniform coverage horn, as shown at *C*. Note that both on-and off-axis response curves are rolled off but run parallel with each other. Since the DI of the horn is essentially flat, the on-axis response will be virtually the same as the PWT response.

At *D*, we have inserted a HF boost to compensate for the driver's rolled off power response, and the result is now flat response both on and off axis. Listeners anywhere in the area covered by the horn will appreciate the smooth and extended response of the system.

Flat power response makes sense only with components exhibiting constant angular coverage. If we had equalized the 2350 horn for flat power response, then the on-axis response would have been too bright and edgy sounding.

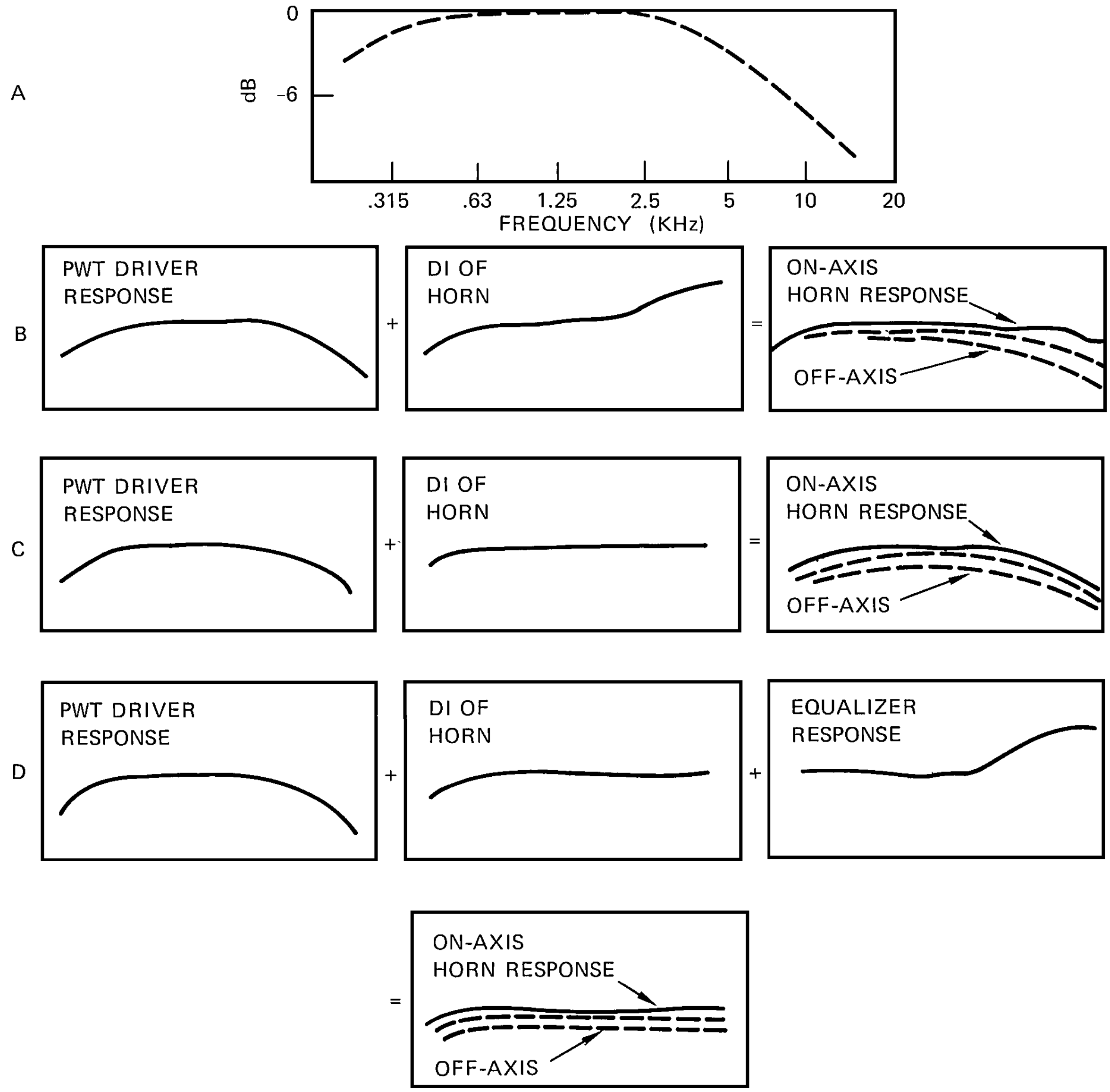

Figure 3-7. Power response of HF systems

The rising DI of most typical radial horns is accomplished through a narrowing of the vertical pattern with rising frequency, while the horizontal pattern remains fairly constant, as shown in Figure 3-8A. Such a horn can give excellent horizontal coverage, and since it is “self equalizing” through its rising DI, there may be no need at all for external equalization. The smooth-running horizontal and vertical coverage angles of a Bi-Radial, as shown at Figure 3-8B, will always require power response HF boosting.

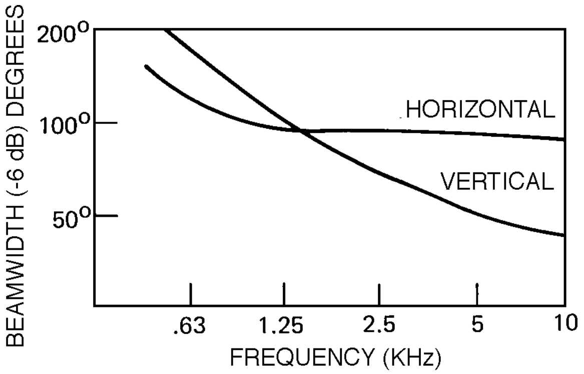

A. BEAMWIDTH CHARACTERISTICS FOR A TYPICAL RADIAL HORN

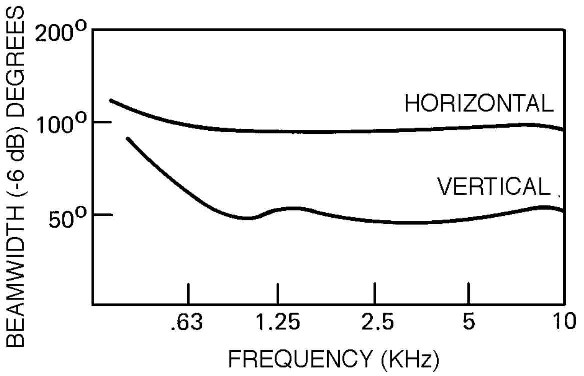

B. BEAMWIDTH CHARACTERISTICS FOR A 40° x 90° BIRADIAL HORN

Figure 3-8. Increasing DI through narrowing vertical beamwidth

Measurement of Directional Characteristics

Polar plots and isobar plots require that the radiator under test be rotated about several of its axes and the response recorded. Beamwidth plots may be taken directly from this data.

DI and Q can be calculated from polar data by integration using the following equation:

$$DI = 10 \log \left[\frac{2}{\int_o^{\pi} (P_\theta)^2 \sin\theta d\theta} \right]$$

P_Q is taken as unity, and q is taken in 10° increments. The integral is solved for a value of DI in the horizontal plane and a value in the vertical plane. The resulting DI and Q for the radiator are given as:

$$DI = \frac{DI_h}{2} + \frac{DI_v}{2}$$

and

$$Q = \sqrt{Q_n \cdot Q_v}$$

(Note: There are slight variations of this method, and of course all commonly use methods are only approximations in that they make use of limited polar data.)

Using Directivity Information

A knowledge of the coverage angles of an HF horn is essential if the device is to be oriented properly with respect to an audience area. If polar plots or isobars are available, then the sound contractor can make calculations such as those indicated in Figure 3-9. The horn used in this example is the JBL 2360 Bi-Radial. We note from the isobars for this horn that the -3 dB angle off the vertical is 14°. The -6 dB and -9 dB angles are 23° and 30° respectively. This data is for the octave band centered at 2 kHz. The horn is aimed so that its major axis is pointed at the farthest seats. This will ensure maximum reach, or "throw," to those seats. We now look at the -3 dB angle of the horn and compare the reduction in the horn's output along that angle with the inverse square advantage at the closer-in seats covered along that axis. Ideally, we would like for the inverse square advantage to exactly match the horn's off-axis fall-off, but this is not always possible. We similarly look at the response along the -6 and -9 dB axes of the horn, comparing them with the inverse square advantages afforded by the closer-in seats. When the designer has flexibility in choosing the horn's location, a good compromise, such as that shown in this figure, will be possible. Beyond the -9 dB angle, the horn's output falls off so rapidly that additional devices, driven at much lower levels, would be needed to cover the front seats (often called "front fill" loudspeakers).

Aiming a horn as shown here may result in a good bit of power being radiated toward the back wall. Ideally, that surface should be fairly absorptive so that reflections from it do not become a problem.

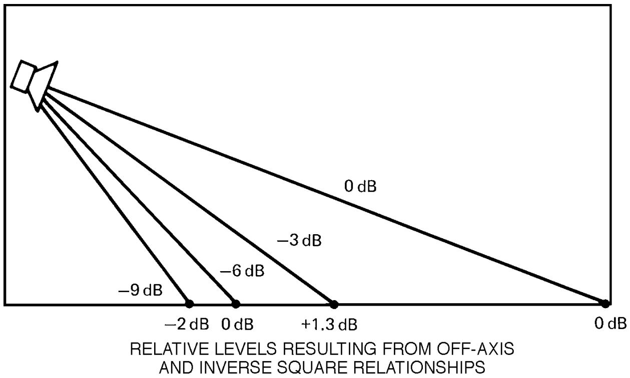

Figure 3-9. Off-axis and inverse square calculations

Directional Characteristics of Combined Radiators

While manufacturers routinely provide data on their individual items of hardware, most provide little, if any, data on how they interact with each other. The data presented here for combinations of HF horns is of course highly wavelength, and thus size, dependent. Appropriate scaling must be done if this data is to be applied to larger or smaller horns.

In general, at high frequencies, horns will act independently of each other. If a pair of horns are properly splayed so that their -6 dB angles just overlap, then the response along that common axis should be smooth, and the effect will be nearly that of a single horn with increased coverage in the plane of overlap. Thus, two horns with 60° coverage in the horizontal plane can be splayed to give 120° horizontal coverage. Likewise, dissimilar horns can be splayed, with a resulting angle being the sum of the two coverage angles in the plane of the splay. Splaying may be done in the vertical plane with similar results. Figure 3-10 presents an example of horn splaying in the horizontal plane.

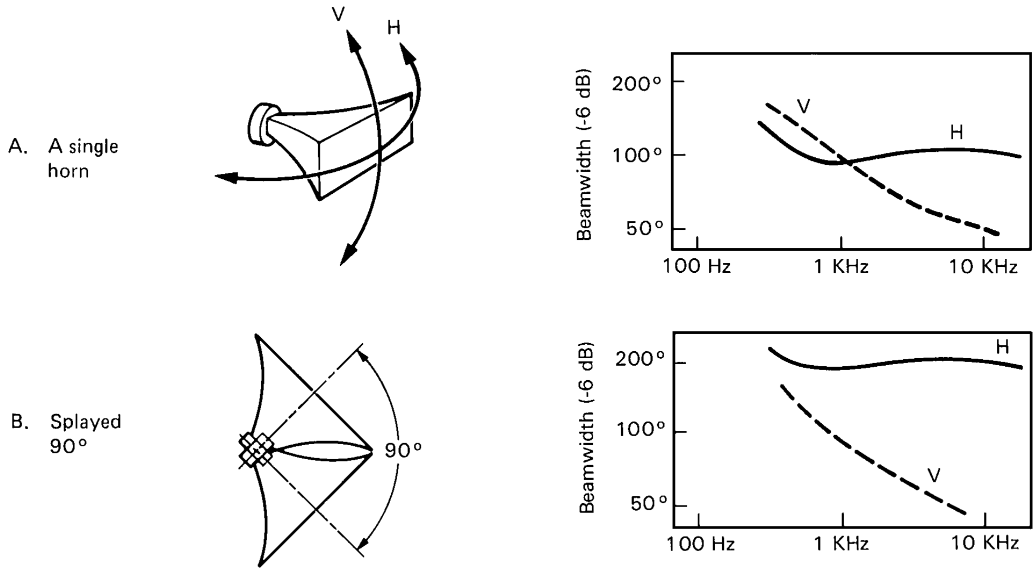

Figure 3-10. Horn splaying for wider coverage

Horns may be stacked in a vertical array to improve pattern control at low frequencies. The JBL Flat-Front Bi-Radials, because of their relatively small vertical mouth dimension, exhibit a broadening in their vertical pattern control below about 2 kHz. When used in vertical stacks of three or four units, the effective vertical mouth dimension is much larger than that of a single horn. The result, as shown in Figure 3-11, is tighter pattern control down to about 500 Hz. In such vertical in-line arrays, the resulting horizontal pattern is the same as for a single horn. Additional details on horn stacking are given in Technical Note Volume 1, Number 7.

A. SINGLE 2370

B. TWO 2370's

C. THREE 2370's

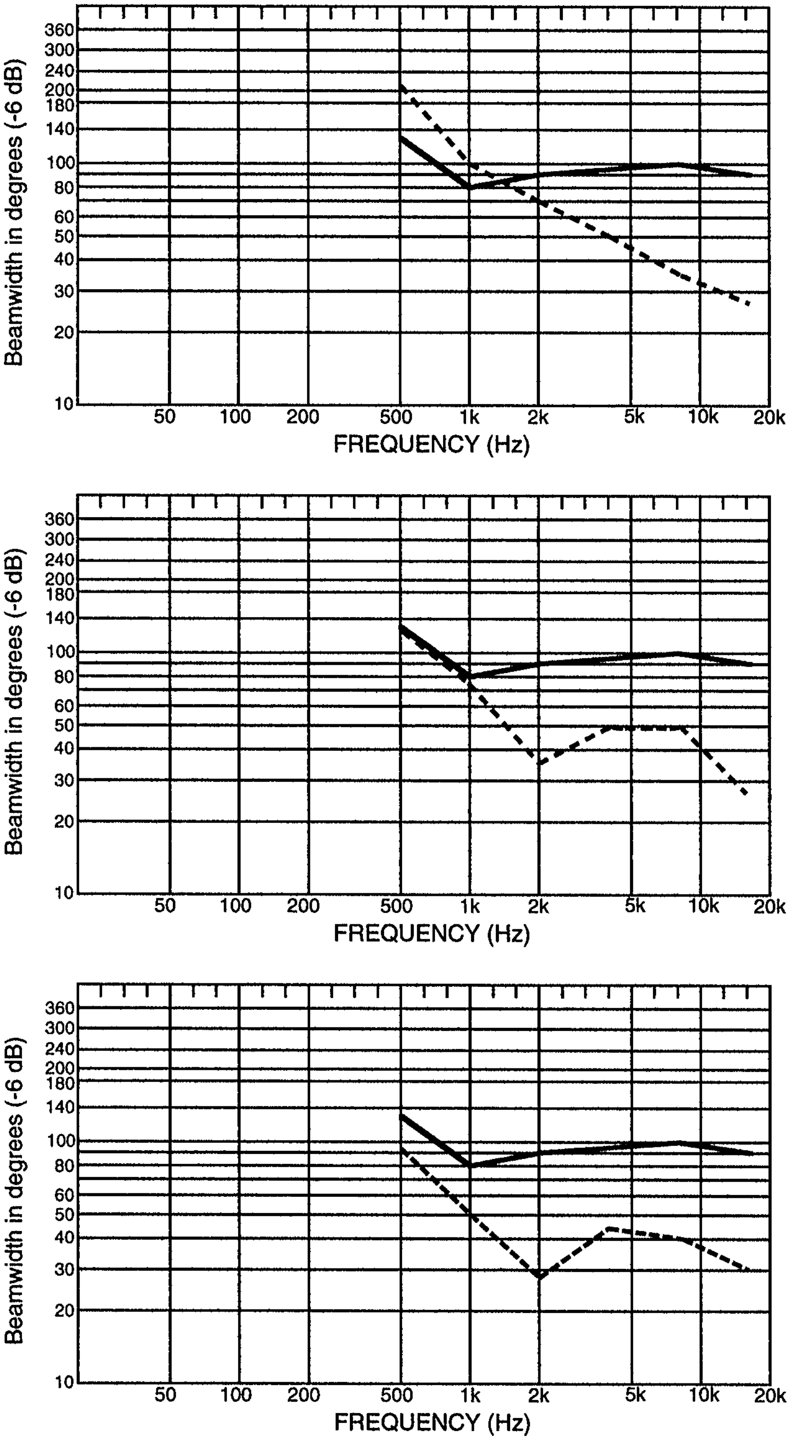

Figure 3-1 1. Stacking horns for higher directivity at low frequencies (solid line, horizontal -6 dB deamwidth, dashed line, vertical -6 dB beamwidth)

Chapter 4: An Outdoor Sound Reinforcement System

Introduction

Our study of sound reinforcement systems begins with an analysis of a simple outdoor system. The outdoor environment is relatively free of reflecting surfaces, and we will make the simplifying assumption that free field conditions exist. A basic reinforcement system is shown in Figure 4-1A. The essential acoustical elements are the talker, microphone, loudspeaker, and listener. The electrical diagram of the system is shown at *B*. The dotted line indicates the acoustical feedback path which can exist around the entire system.

When the system is turned on, the gain of the amplifier can be advanced up to some point at which the system will "ring," or go into feedback. At the onset of feedback, the gain around the electro-acoustical path is unity and at a zero phase angle. This condition is shown at *C*, where the input at the microphone of a single pulse will give rise to a repetitive signal at the microphone, fed back from the loudspeaker and which will quickly give rise to sustained oscillation at a single frequency with a period related to Dt.

Even at levels somewhat below feedback, the response of the system will be irregular, due to the fact that the system is "trying" to go into feedback, but does not have enough loop gain to sustain it. This is shown in Figure 4-2. As a rule, a workable reinforcement system should have a gain margin of 6 to 10 dB before feedback if it is to sound natural on all types of program input.

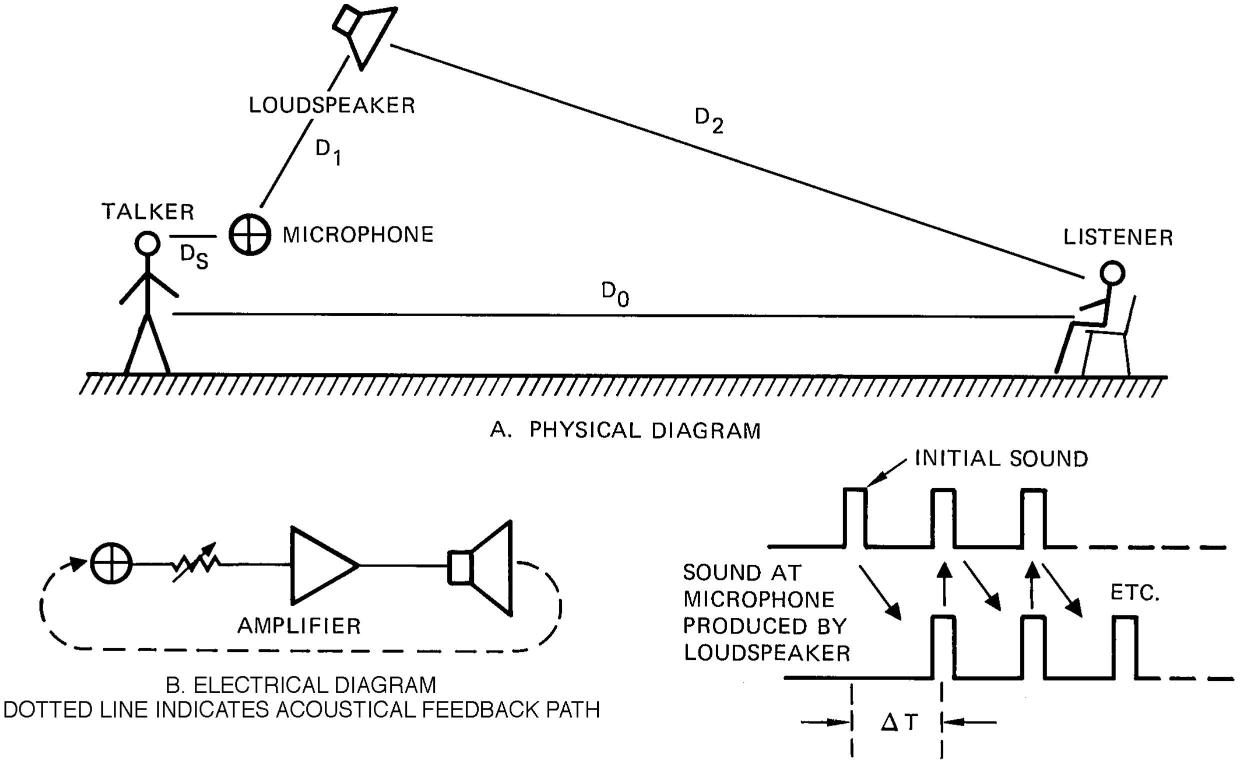

B. ELECTRICAL DIAGRAM
DOTTED LINE INDICATES ACOUSTICAL FEEDBACK PATH

C. ACOUSTICAL FEEDBACK
A SINGLE PULSE GIVES RISE TO A TRAIN OF PULSES

Figure 4-1. A simple outdoor reinforcement system

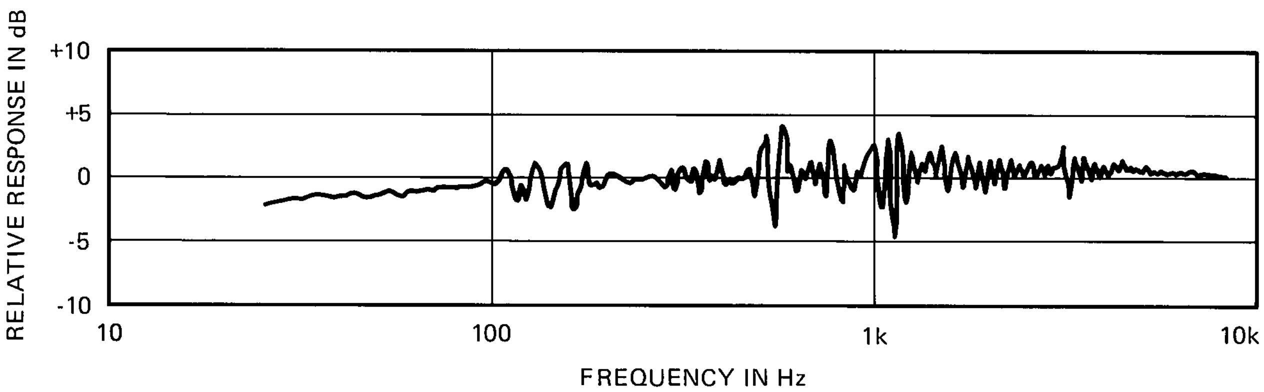

Figure 4-2. Electrical response of a sound system 3 dB below sustained acoustical feedback

The Concept of Acoustical Gain

Boner (4) quantified the concept of acoustical gain, and we will now present its simple but elegant derivation. Acoustical gain is defined as the increase in level that a given listener in the audience perceives with the system turned on, as compared to the level the listener hears directly from the talker when the system is off.

Referring to Figure 4-3, let us assume that both the loudspeaker and microphone are omnidirectional; that is, DI = 0 dB and Q = 1. Then by inverse square loss, the level at the listener will be:

$$70 \text{ dB} - 20 \log (7/1) = 70 - 17 = 53 \text{ dB}$$

Now, we turn the system on and advance the gain until we are just at the onset of feedback. This will occur when the loudspeaker, along the D_1 path, produces a level at the microphone equal to that of the talker, 70 dB.

If the loudspeaker produces a level of 70 dB at the microphone, it will produce a level at the listener of:

$$70 - 20 \log (6/4) = 70 - 3.5 = 66.5 \text{ dB}$$

With no safety margin, the maximum gain this system can produce is:

$$66.5 - 53 = 13.5 \text{ dB}$$

Rewriting our equations:

$$\text{Maximum gain} = 70 - 20 \log (D_2/D_1) - 70 - 20 \log (D_0/D_s)$$

This simplifies to:

$$\text{Maximum gain} = 20 \log D_0 - 20 \log D_s + 20 \log D_1 - 20 \log D_2$$

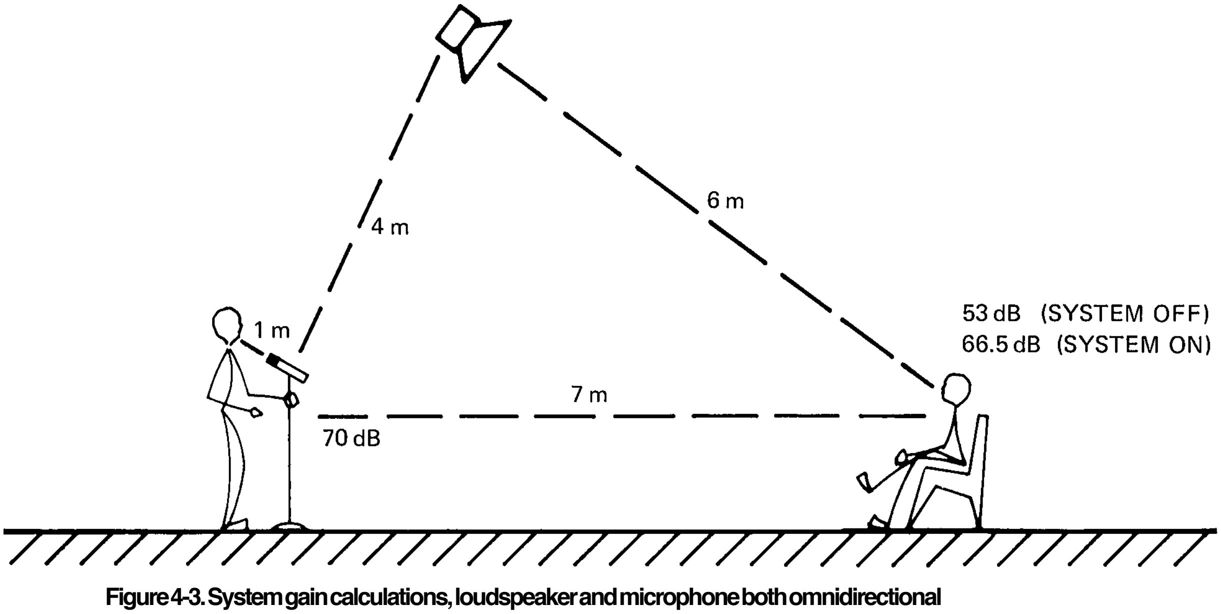

Figure 4-3. System gain calculations, loudspeaker and microphone both omnidirectional

Adding a 6 dB safety factor gives us the usual form of the equation:

$$\text{Maximum gain} = 20 \log D_0 - 20 \log D_s + 20 \log D_1 - 20 \log D_2 - 6$$

In this form, the gain equation tells us several things, some of them intuitively obvious:

1. That gain is independent of the level of the talker
2. That decreasing D_s will increase gain
3. That increasing D_1 will increase gain.

The Influence of Directional Microphones and Loudspeakers on System Maximum Gain

Let us rework the example of Figure 4-3, this time making use of a directional loudspeaker whose midband polar characteristics are as shown in Figure 4-4A. It is obvious from looking at Figure 4-4A that sound arriving at the microphone along the D_1 direction will be reduced 6 dB relative to the omnidirectional loudspeaker. This 6 dB results directly in added gain potential for the system.

The same holds for directional microphones, as shown in Figure 4-5A. In Figure 4-5B, we show a system using an omnidirectional loudspeaker and a cardioid microphone with its -6 dB axis facing toward the loudspeaker. This system is equivalent to the one shown in Figure 4-4B; both exhibit a 6 dB increase in maximum gain over the earlier case where both microphone and loudspeaker were omnidirectional.

Finally, we can use both directional loudspeakers and microphones to pick up additional gain. We simply calculate the maximum gain using omnidirectional elements, and then add to that value the off-axis pattern advantage in dB for both loudspeaker and microphone. As a practical matter, however, it is not wise to rely too heavily on directional microphones and loudspeakers to make a significant increase in system gain. Most designers are content to realize no more than 4-to-6 dB overall added gain from the use of directional elements. The reason for this is that microphone and loudspeaker directional patterns are not constant with frequency. Most directional loudspeakers will, at low frequencies, appear to be nearly omnidirectional. If more gain is called for, the most straightforward way to get it is to reduce D_s or increase D_1.

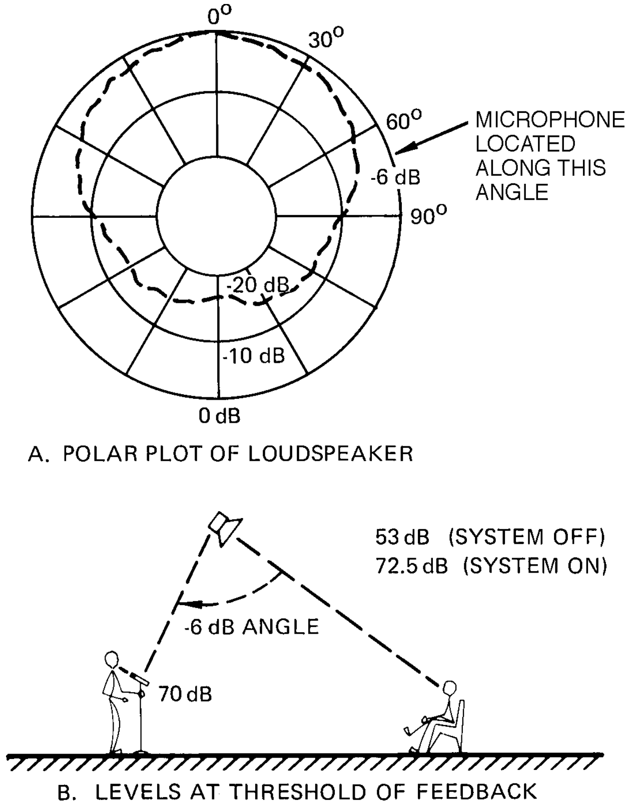

Figure 4-4. System gain calculations, directional loudspeaker

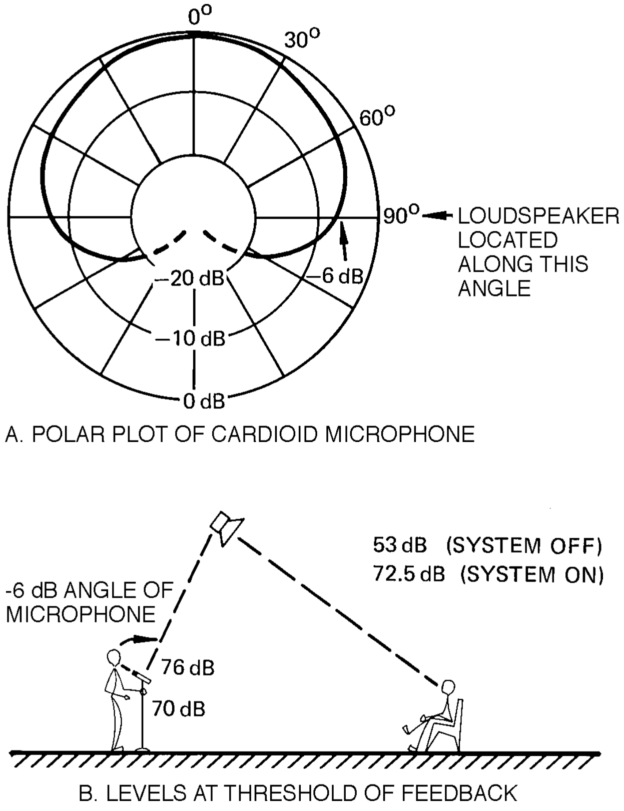

Figure 4-5. System gain calculations, directional microphone

How Much Gain is Needed?

The parameters of a given sound reinforcement system may be such that we have more gain than we need. When this is the case, we simply turn things down to a comfortable point, and everyone is happy. But things often do not work out so well. What is needed is some way of determining beforehand how much gain we will need so that we can avoid specifying a system which will not work. One way of doing this is by specifying the *equivalent*, or *effective, acoustical distance (EAD),* as shown in Figure 4-6. Sound reinforcement systems may be thought of as effectively moving the talker closer to the listener. In a quiet environment, we may not want to bring the talker any closer than, say, 3 meters from the listener. What this means, roughly, is that the loudness produced by the reinforcement system should approximate, for a listener at D_0, the loudness level of an actual talker at a distance of 3 meters. The gain necessary to do this is calculated from the inverse square relation between D_0 and *EAD*:

$$\text{Necessary gain} = 20 \log D_0 - 20 \log \text{EAD}$$

In our earlier example, D_0 = 7 meters. Setting EAD = 3 meters, then:

$$\text{Necessary gain} = 20 \log (7) - 20 \log (3) = 17 - 9.5 = 7.5 \text{ dB}$$

Assuming that both loudspeaker and microphone are omnidirectional, the maximum gain we can expect is:

$$\text{Maximum gain} = 20 \log (7) - 20 \log (1) + 20 \log (4) - 20 \log (6) - 6$$

$$\text{Maximum gain} = 17 - 0 + 12 - 15.5 - 6$$

$$\text{Maximum gain} = 7.5 \text{ dB}$$

As we can see, the necessary gain and the maximum gain are both 7.5 dB, so the system will be workable. If, for example, we were specifying a system for a noisier environment requiring a shorter *EAD*, then the system would not have sufficient gain. For example, a new *EAD* of 1.5 meters would require 6 dB more acoustical gain. As we have discussed, using a directional microphone and a directional loudspeaker would just about give us the needed 6 dB. A simpler, and better, solution would be to reduce D_s to 0.5 meter in order to get the added 6 dB of gain.

In general, in an outdoor system, satisfactory articulation will result when speech peaks are about 25 dB higher than the A-weighted ambient noise level. Typical conversation takes place at levels of 60 to 65 dB at a distance of one meter. Thus, in an ambient noise field of 50 dB, we would require speech peaks of 75 to 80 dB for comfortable listening, and this would require an EAD as close as 0.25 meter, calculated as follows:

Speech level at 1 meter = 65 dB

Speech level at 0.5 meter = 71 dB

Speech level at 0.25 meter = 77 dB

Let us see what we must do to our outdoor system to make it work under these demanding conditions. First, we calculate the necessary acoustical gain:

$$\text{Necessary gain} = 20 \log D_0 - 20 \log \text{EAD}$$

$$\text{Necessary gain} = 20 \log (7) - 20 \log (.25)$$

$$\text{Necessary gain} = 17 + 12 = 29 \text{ dB}$$

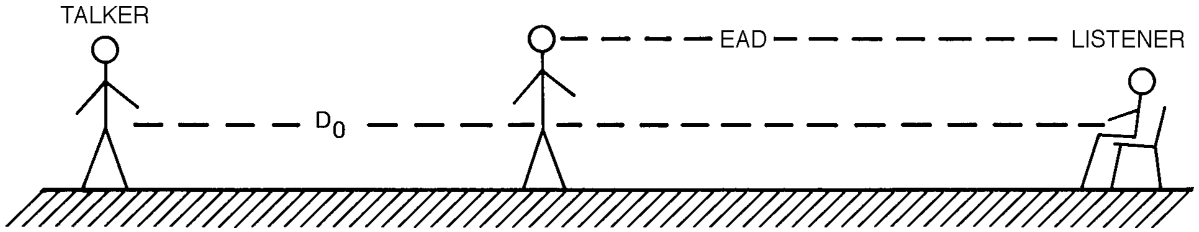

Figure 4-6. Concept of Effective Acoustical Dustance (EAD)

As we saw in an earlier example, our system only has 7.5 dB of maximum gain available with a 6 dB safety factor. By going to both a directional microphone and a directional loudspeaker, we can increase this by about 6 dB, yielding a maximum gain of 13.5 dB — still some 16 dB short of what we actually need.

The solution is obvious; a hand-held microphone will be necessary in order to achieve the required gain. For 16 dB of added gain, D_s will have to be reduced to the value calculated below:

$$16 = 20 \log (1/x)$$

$$16/20 = \log (1/x)$$

$$10^{.8} = 1/x$$

Therefore: $x = 1/10^{.8} = 0.16$ meter (6")

Of course, the problem with a hand-held microphone is that it is difficult for the user to maintain a fixed distance between the microphone and his mouth. As a result, the gain of the system will vary considerably with only small changes in the performer-microphone operating distance. It is always better to use some kind of personal microphone, one worn by the user. In this case, a swivel type microphone attached to a headpiece would be best, since it provides the minimum value of D_S. This type of microphone is now becoming very popular on-stage, largely because a number of major pop and country artists have adopted it. In other cases a simple tietack microphone may be sufficient.

Conclusion

In this chapter, we have presented the rudiments of gain calculation for sound systems, and the methods of analysis form the basis for the study of indoor systems, which we will cover in a later chapter.

Chapter 5: Fundamentals of Room Acoustics

Introduction

Most sound reinforcement systems are located indoors, and the acoustical properties of the enclosed space have a profound effect on the system's requirements and its performance. Our study begins with a discussion of sound absorption and reflection, the growth and decay of sound fields in a room, reverberation, direct and reverberant sound fields, critical distance, and room constant.

If analyzed in detail, any enclosed space is quite complex acoustically. We will make many simplifications as we construct "statistical" models of rooms, our aim being to keep our calculations to a minimum, while maintaining accuracy on the order of 10%, or ±1 dB.

Absorption and Reflection of Sound

Sound tends to "bend around" non-porous, small obstacles. However, large surfaces such as the boundaries of rooms are typically partially flexible and partially porous. As a result, when sound strikes such a surface, some of its energy is reflected, some is absorbed, and some is transmitted through the boundary and again propagated as sound waves on the other side. See Figure 5-1.

All three effects may vary with frequency and with the angle of incidence. In typical situations, they *do not* vary with sound intensity. Over the range of sound pressures commonly encountered in audio work, most construction materials have the same characteristics of reflection, absorption and transmission whether struck by very weak or very strong sound waves.

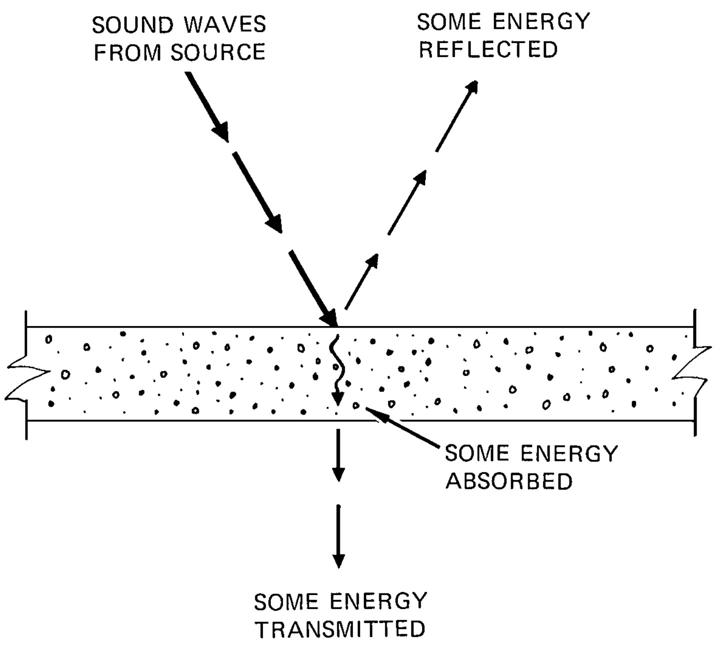

ALL THREE EFFECTS MAY VARY WITH FREQUENCY AND ANGLE OF INCIDENCE.
THEY DO NOT VARY WITH INTENSITY IN TYPICAL SITUATIONS.

Figure 5-1. Sound impinging on a large boundary surface

When dealing with the behavior of sound in an enclosed space, we must be able to estimate how much sound energy will be lost each time a sound wave strikes one of the boundary surfaces or one of the objects inside the room. Tables of absorption coefficients for common building materials as well as special "acoustical" materials can be found in any architectural acoustics textbook or in data sheets supplied by manufacturers of construction materials.

Unless otherwise specified, published sound absorption coefficients represent average absorption over all possible angles of incidence. This is desirable from a practical standpoint since the random incidence coefficient fits the situation that exists in a typical enclosed space where sound waves rebound many times from each boundary surface in virtually all possible directions.

Absorption ratings normally are given for a number of different frequency bands. Typically, each band of frequencies is one octave wide, and standard center frequencies of 125 Hz, 250 Hz, 500 Hz, 1 kHz, etc., are used. In sound system design, it usually is sufficient to know absorption characteristics of materials in three or four frequency ranges. In this handbook, we make use of absorption ratings in the bands centered at 125 Hz, 1 kHz and 4 kHz.

The effects of mounting geometry are included in standardized absorption ratings by specifying the types of mounting according to an accepted numbering system. In our work, familiarity with at least three of these standard mountings is important.

Acoustical tile or other interior material cemented directly to a solid, non-absorptive surface is called "No. 1" mounting (see Figure 5-2). To obtain greater absorption, especially at lower frequencies, the material may be spaced out on nominal two-inch thick furring strips and the cavity behind loosely filled with fiberglass blanket. This type of mounting is called out as "No. 2". "No. 7" mounting is the familiary suspended "T"-bar ceiling system. Here the material is spaced at least 0.6 meter (2') away from a solid structural boundary.

Absorption coefficients fall within a scale from zero to one following the concept established by Sabine, the pioneer of modern architectural acoustics. Sabine suggested that an open window be considered a perfect absorber (since no sound is reflected) and that its sound absorption coefficient must therefore be 100 percent, or unity. At the other end of the scale, a material which reflects all sound and absorbs none has an absorption coefficient of zero.

In older charts and textbooks, the total absorption in a room may be given in sabins. The *sabin* is a unit of absorption named after Sabine and is the equivalent of one square foot of open window. For example, suppose a given material has an absorption coefficient of 0.1 at 1 kHz. One hundred square feet of this material in a room has a total absorption of 10 sabins. (Note: When using SI units, the *metric sabin* is equal to one square meter of totally absorptive surface.)

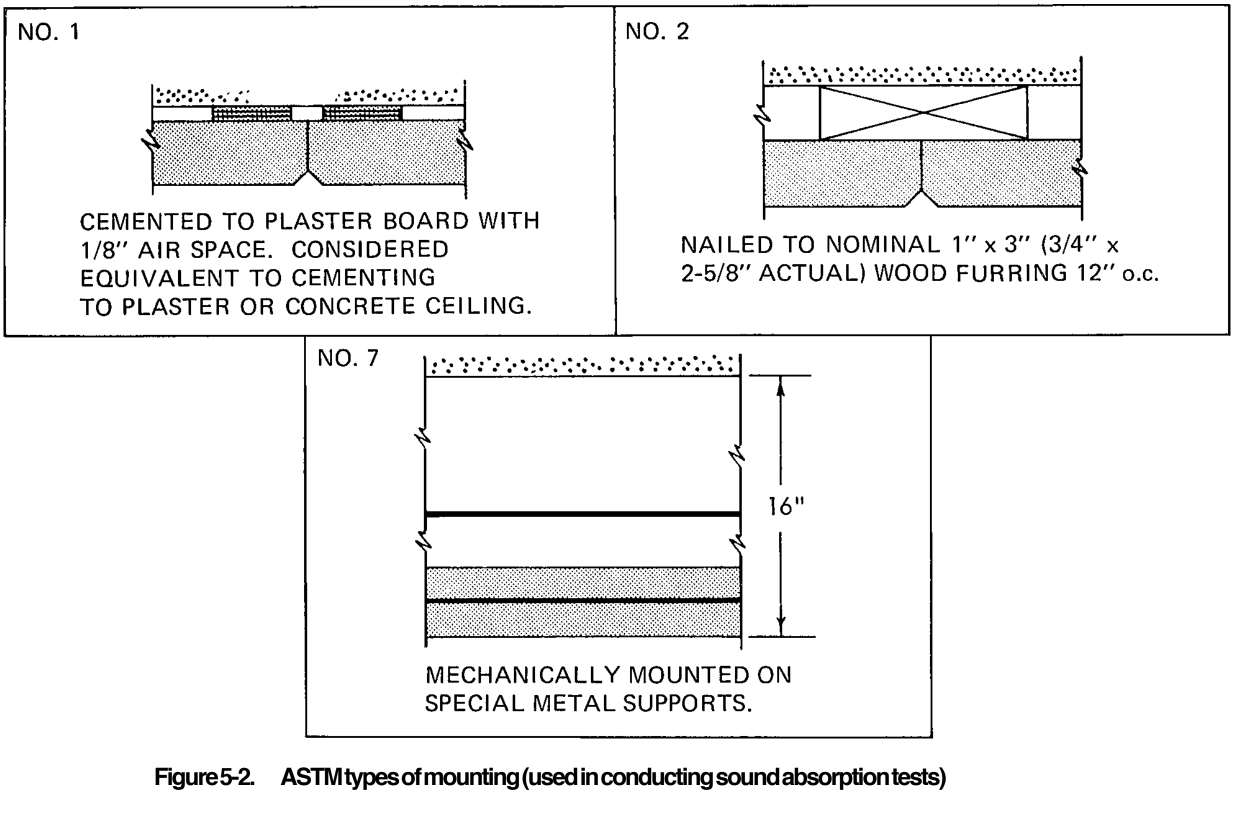

Figure 5-2. ASTM types of mounting (used in conducting sound absorption tests)

More recent publications usually express the absorption in an enclosed space in terms of the *average absorption coefficient*. For example, if a room has a total surface area of 1000 square meters consisting of 200 square meters of material with an absorption coefficient of .8 and 800 square meters of material with an absorption coefficient of .1, the average absorption coefficient for the entire internal surface area of the room is said to be .24:

Area:	Coefficient:	Sabins:
200	x 0.8	= 160
800	x 0.1	= 80
1000		240

$$\bar{a} = \frac{240}{1000} = 0.24$$

The use of the average absorption coefficient $\bar{a}$ has the advantage that it is not tied to any particular system of measurement. An average absorption coefficient of 0.15 is exactly the same whether the surfaces of the room are measured in square feet, square yards, or square meters. It also turns out that the use of an average absorption coefficient facilitates solving reverberation time, direct-to-reverberant sound ratio, and steady-state sound pressure.

ABSORP. COEFF. a	REFL. COEFF. $1-a$ (γ)	REFL. COEFF. dB
.01	.99	–.044
.02	.98	–.088
.03	.97	–.13
.04	.96	–.18
.05	.95	–.22
.06	.94	–.27
.07	.93	–.32
.08	.92	–.36
.09	.91	–.41
.10	.90	–.46
.20	.80	–.97
.30	.70	–1.5
.40	.60	–2.2
.50	.50	–3.0
.60	.40	–4.0
.70	.30	–5.2
.80	.20	–7.0
.90	.10	–10.0
.95	.05	–13.0

Figure 5-3. Reflection coefficient in decibels as a function of absorption coefficient

Although we commonly use published absorption coefficients without questioning their accuracy and perform simple arithmetic averaging to compute the average absorption coefficient of a room, the numbers themselves and the procedures we use are only approximations. While this does not upset the reliability of our calculations to a large degree, it is important to realize that the limit of confidence when working with published absorption coefficients is probably somewhere in the neighborhood of ±10%.

How does the absorption coefficient of the material relate to the intensity of the reflected sound wave? An absorption coefficient of 0.2 at some specified frequency and angle of incidence means that 20% of the sound energy will be absorbed and the remaining 80% reflected. The conversion to decibels is a simple 10 log function:

$$10 \log_{10} 0.8 = -0.97 \text{ dB}$$

In the example given, the ratio of reflected to direct sound energy is about -1 dB. In other words, the reflected wave is 1 dB weaker than it would have been if the surface were 100% reflective. See the table in Figure 5-3.

Thinking in terms of decibels can be of real help in a practical situation. Suppose we want to improve the acoustics of a small auditorium which has a pronounced "slap" off the rear wall. To reduce the intensity of the slap by only 3 dB, the wall must be surfaced with some material having an absorption coefficient of 0.5! To make the slap half as loud (a reduction of 10 dB) requires acoustical treatment of the rear wall to increase its absorption coefficient to 0.9. The difficulty is heightened by the fact that most materials absorb substantially less sound energy from a wave striking head-on than their random incidence coefficients would indicate.

Most "acoustic" materials are porous. They belong to the class which acousticians elegantly label "fuzz". Sound is absorbed by offering resistance to the flow of air through the material and thereby changing some of the energy to heat.

But when porous material is affixed directly to solid concrete or some other rigid non-absorptive surface, it is obvious that there can be no air motion and therefore no absorption at the boundary of the two materials.

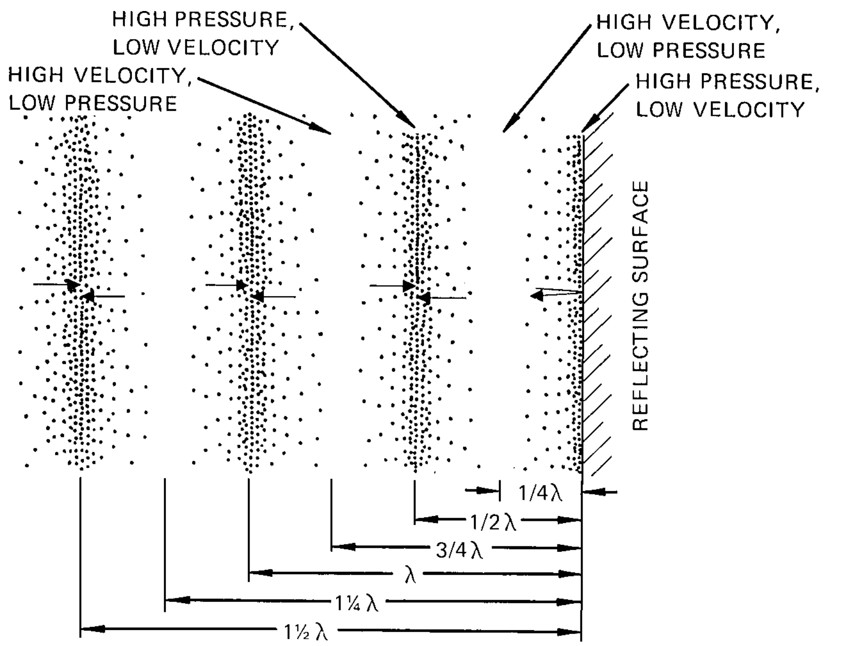

A PLANE WAVE REFLECTED FROM A PLANE SURFACE AT NORMAL INCIDENCE PRODUCES WELL DEFINED ZONES OF HIGH PRESSURE ALTERNATING WITH ZONES OF HIGH PARTICLE VELOCITY AT DISTANCES OF ONE-QUARTER WAVELENGTH

Figure 5-4. Interference pattern of sound reflected from a solid boundary

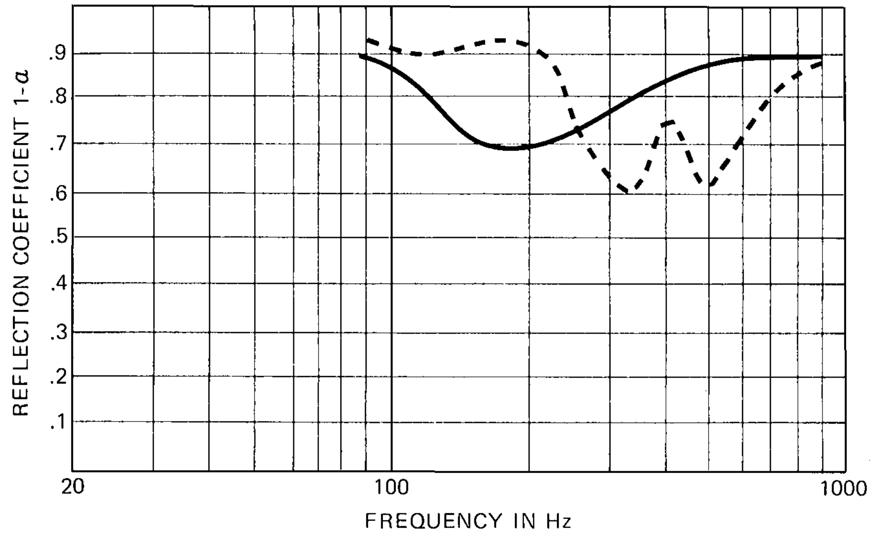

SOLID LINE – 1/8" PLYWOOD
DOTTED LINE – 1/16" PLYWOOD

PANELS UNBACKED (NO ABSORPTIVE BLANKET) WITH 1¼" AIR SPACE.

(CHART SHOWS REFLECTION COEFFICIENT RATHER THAN ABSORPTION COEFFICIENT TO CONFORM WITH NORMAL FREQUENCY RESPONSE CURVES IN WHICH "UP" MEANS MORE LEVEL RATHER THAN MORE ATTENUATION.)

Figure 5-5. Reflectivity of thin plywood panels

Consider a sound wave striking such a boundary at normal incidence, shown in Figure 5-4. The reflected energy leaves the boundary in the opposite direction from which it entered and combines with subsequent sound waves to form a classic standing wave pattern. Particle velocity is very small (theoretically zero) at the boundary of the two materials and also at a distance 1/2 wavelength away from the boundary. Air particle velocity is at a maximum at 1/4 wavelength from the boundary. From this simple physical relationship it seems obvious that unless the thickness of the absorptive material is appreciable in comparison with a quarter wavelength, its effect will be minimal.

This physical model also explains the dramatic increase in absorption obtained when a porous material is spaced away from a boundary surface. By spacing the layer of absorptive material exactly one-quarter wavelength away from the wall, where particle velocity is greatest, its effective absorption is multiplied many times. The situation is complicated by the necessity of considering sound waves arriving from all possible directions. However, the basic effect remains the same: porous materials can be made more effective by making them thicker or by spacing them away from non-absorptive boundary surfaces.

A thin panel of wood or other material also absorbs sound, but it must be free to vibrate. As it vibrates in response to sound pressure, frictional losses change some of the energy into heat and sound is thus absorbed. Diaphragm absorbers tend to resonate at a particular band of frequencies, as any other tuned circuit, and they must be used with care. Their great advantage is the fact that low frequency absorption can be obtained in less depth than would be required for porous materials. See Figure 5-5.

A second type of tuned absorber occasionally used in acoustical work is the Helmholtz resonator: a reflex enclosure without a loudspeaker. (A patented construction material making use of this type of absorption is called “Soundblox”. These masonry blocks containing sound absorptive cavities can be used in gymnasiums, swimming pools, and other locations in which porous materials cannot be employed.)

The Growth and Decay of a Sound Field in a Room

At this point we should have sufficient understanding of the behavior of sound in free space and the effects of large boundary surfaces to understand what happens when sound is confined in an enclosure. The equations used to describe the behavior of sound systems in rooms all involve considerable “averaging out” of complicated phenomena. Our calculations, therefore, are made on the basis of what is typical or normal; they do not give precise answers for particular cases. In most situations, we can estimate with a considerable degree of confidence, but if we merely plug numbers into equations without understanding the underlying physical processes, we may find ourselves making laborious calculations on the basis of pure guesswork without realizing it.

Suppose we have an omnidirectional sound source located somewhere near the center of a room. The source is turned on and from that instant sound radiates outward in all directions at 344 meters per second (1130 feet per second) until it strikes the boundaries of the room. When sound strikes a boundary surface, some of the energy is absorbed, some is transmitted through the boundary and the remainder is reflected back into the room where it travels on a different course until another reflection occurs. After a certain length of time, so many reflections have taken place that the sound field is now a random jumble of waves traveling in all directions throughout the enclosed space.

If the source remains on and continues to emit sound at a steady rate, the energy inside the room builds up until a state of equilibrium is reached in which the sound energy being pumped into the room from the source exactly balances the sound energy dissipated through absorption and transmission through the boundaries. Statistically, all of the individual sound packets of varying intensities and varying directions can be averaged out, and at all points in the room not too close to the source or any of the boundary surfaces, we can say that a uniform diffuse sound field exists.

The geometrical approach to architectural acoustics thus makes use of a sort of “soup” analogy. As long as a sufficient number of reflections have taken place, and as long as we can disregard such anomalies as strong focused reflections, prominent resonant frequencies, the direct field near the source, and the strong possibility that all room surfaces do not have the same absorption characteristics, this statistical model may be used to describe the sound field in an actual room. In practice, the approach works remarkably well. If one is careful to allow for some of the factors mentioned,

theory allows us to make simple calculations regarding the behavior of sound in rooms and arrive at results sufficiently accurate for most noise control and sound system calculations.

Going back to our model, consider what happens when the sound source is turned off. Energy is no longer pumped into the room. Therefore, as a certain amount of energy is lost with each reflection, the energy density of the sound field gradually decreases until all of the sound has been absorbed at the boundary surfaces.

Figure 5-6 gives a simple picture of this in idealized form. In the left graph, the vertical axis represents total sound energy in the room and the horizontal axis represents some convenient time scale. From the instant the sound source is turned on, the total energy in the room increases until it gradually levels off at a steady state value. Once this balance has been achieved, the sound source is turned off and the total energy in the room decreases until all of it has been absorbed. Note that in this idealized picture, growth and decay are exponential functions. The curve is exactly the same as the familiar graph of the charging and discharging of the capacitor.

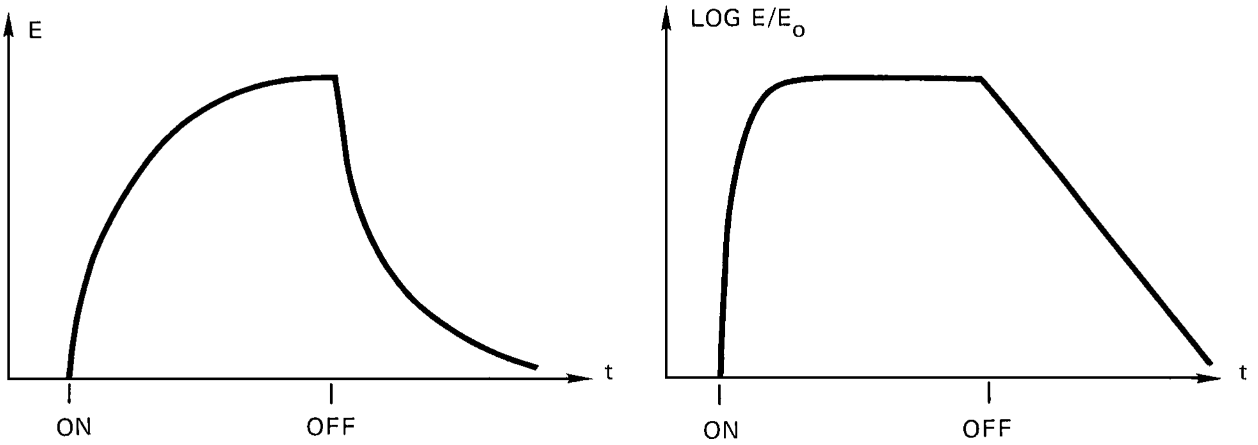

Figure 5-6. Idealized growth and decay of sound energy in an enclosure

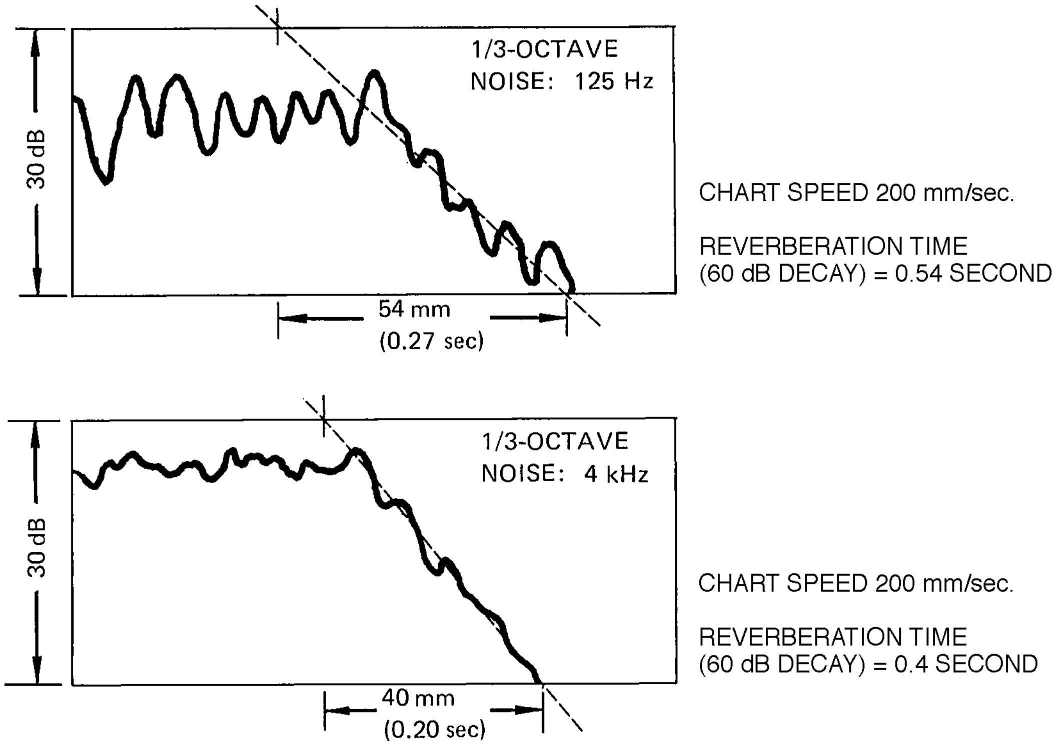

Figure 5-7. Actual chart recordings of decay of sound in a room

It is easier for us to comprehend this theoretical state of affairs if energy growth and decay are plotted on a decibel scale. This is what has been done in the graph. In decibel relationships, the growth of sound is very rapid and decay becomes a straight line. The slope of the line represents the rate of decay in decibels per second.

How closely does the behavior of sound in a real room approach this statistical picture? Figure 5-7 shows actual chart recordings of the decay of sound in a fairly absorptive room. Each chart was made by using a one-third octave band of random noise as the test signal. A sound level meter was located in the reverberant sound field. (In practice several readings would be taken at a number of different locations in the room).

The upper graph illustrates a measurement made in the band centered at 125 Hz. Note the great fluctuations in the steady state level and similar fluctuations as the sound intensity decreases. The fluctuations are sufficiently great to make any “exact” determination of the decay rate impossible. Instead, a straight line which seems to represent the “best fit” is drawn and its slope measured. In this case, the slope of the line is such that sound pressure seems to be decaying at a rate of 30 dB per 0.27 seconds. This works out to a decay rate of 111 dB per second.

The lower chart shows a similar measurement taken with the one-third octave band centered at 4 kHz. The fluctuations in level are not as pronounced, and it is much easier to arrive at what seems to be the correct slope of the sound decay. In this instance sound pressure appears to be decreasing at a rate of 30 dB in 0.2 seconds, or a decay rate of 150 dB per second.

Reverberation and Reverberation Time

The term *decay rate* is relatively unfamiliar; usually we talk about *reverberation time*. Originally, reverberation time was described simply as the length of time required for a very loud sound to die away to inaudibility. It was later defined in more specific terms as the actual time required for sound to decay 60 decibels. In both definitions it is assumed that decay rate is uniform and that the ambient noise level is low enough to be ignored.

In the real world, the decay rate in a particular band of frequencies may not be uniform and it may be very difficult to measure accurately over a total 60 dB range. Most acousticians are satisfied to measure the first 30 dB decay after a test signal is turned off and to use the slope of this portion of the curve to define the average decay rate and thus the reverberation time. In the example just given, estimates must be made over a useful range of only 20 dB or so. However, the height of the chart paper corresponds to a total range of 30 dB and this makes calculation of reverberation time quite simple. At 125 Hz a sloping line drawn across the full width of the chart paper is equivalent to a 30 dB decay in 0.27 seconds. Reverberation time (60 dB decay) must therefore be twice this value, or 0.54 seconds. Similarly, the same room has a reverberation time of only 0.4 seconds in the 4 kHz band.

In his original work in architectural acoustics, Sabine assumed the idealized exponential growth and decay of sound we showed in Figure 5-6. However, his equation based on this model was found to be inaccurate in rooms having substantial absorption. In other words, the Sabine equation works well in live rooms, but not in moderately dead ones. In the 1920’s and 1930’s, a great deal of work was done in an effort to arrive at a model that would more accurately describe the growth and decay of sound in all types of rooms. On the basis of the material presented thus far, let us see if we can construct such a model.

We start by accepting the notion of a uniform diffuse steady state sound field. Even though the sound field in a real room may fluctuate, and although it may not be exactly the same at every point in the room, some sort of overall intensity average seems to be a reasonable simplifying assumption.

If we can average out variations in the sound field throughout the room, perhaps we can also find an average distance that sound can travel before striking one of the boundary surfaces. This notion of an average distance between bounces is more accurately known as the *mean free path* (MFP) and is a common statistical notion in other branches of physics. For typical rooms, the MFP turns out to be equal to 4V/S, where V is the enclosed volume and S is the area of all the boundary surfaces.

Since sound waves will have bounced around all parts of the room striking all of the boundary surfaces in almost all possible angles before being completely absorbed, it seems reasonable that there should be some sort of average absorption coefficient $\bar{a}$ which would describe the total boundary surface area. We will use the simple arithmetic averaging technique to calculate this coefficient.

At this point we have postulated a highly simplified acoustical model which assumes that, on the average, the steady state sound intensity in an actual room can be represented by a single number. We also have assumed that, on the average, sound waves in this room travel a distance equivalent to MFP between bounces. Finally, we have assumed that, on the average, each time sound encounters a boundary surface it impinges upon a material having a random incidence absorption coefficient denoted

$S = 126 m^2$
$V = 90 m^3$
$4V/S = 3 m$
MEAN FREE TIME = .008 sec

FLOOR = $30 m^2 \times .30 = 9 m^2$
CEILING = $30 m^2 \times .33 = 10 m^2$
WALLS = $66 m^2 \times .09 = 5.9 m^2$

$126 m^2 \qquad 24.9 m^2$

$$\bar{a} = \frac{24.9}{126} = 0.2$$

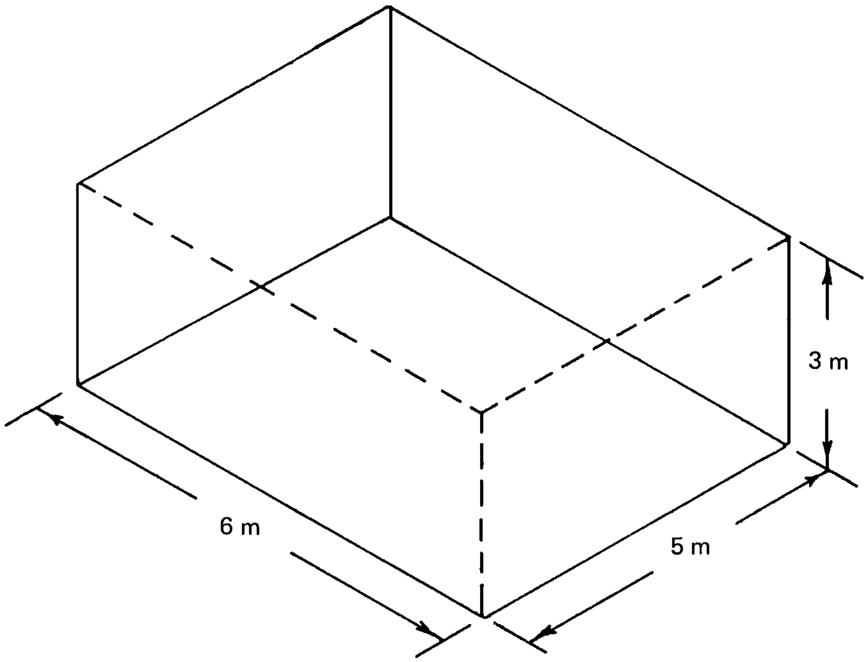

Figure 5-8. Calculating reverberation time

REVERBERATION TIME EQUATIONS: T = 60 dB DECAY TIME IN SECONDS		
EQUATION:	ENGLISH UNITS: S = SURFACE AREA IN FT^2 V = VOLUME IN FT^3	SI UNITS: S = SURFACE AREA IN m^2 V = VOLUME IN m^3
SABINE – GIVES BEST CORRESPONDENCE WITH PUBLISHED ABSORPTION COEFFICIENTS WHERE $\bar{a}$ IS LESS THAN 0.2	$T = \frac{.049V}{S\bar{a}}$	$T = \frac{.16V}{S\bar{a}}$
EYRING – PREFERRED FORMULA FOR WELL-BEHAVED ROOMS HAVING $\bar{a}$ GREATER THAN 0.2 OR SO	$T = \frac{.049V}{-S \ln(1-\bar{a})}$	$T = \frac{.16V}{-S \ln(1-\bar{a})}$
FITZROY-(SABIN) – FOR RECTANGULAR ROOMS IN WHICH ABSORPTION IS NOT WELL DISTRIBUTED.	$T = \frac{.049V}{S^2}\left(\frac{X^2}{X\alpha_x} + \frac{Y^2}{Y\alpha_y} + \frac{Z^2}{Z\alpha_z}\right)$	$T = \frac{.16V}{S^2}\left(\frac{X^2}{X\alpha_x} + \frac{Y^2}{Y\alpha_y} + \frac{Z^2}{Z\alpha_z}\right)$
αx, αy, AND αz ARE AVERAGE ABSORPTION COEFFICIENTS OF OPPOSING PAIRS OF SURFACES WITH TOTAL AREAS x, y, AND z.		

Figure 5-9. Reverberation time equations

by a single number, ā. Only one step remains to complete our model. Since sound travels at a known rate of speed, the mean free path is equivalent to a certain *mean free time* between bounces.

Now imagine what must happen if we apply our model to the situation that exists in a room immediately after a uniformly emitting sound source has been turned off. The sound waves continue to travel for a distance equal to the mean free path. At this point they encounter a boundary surface having an absorption coefficient of ā and a certain percentage of the energy is lost. The remaining energy is reflected back into the room and again travels a distance equal to the mean free path before encountering another boundary with absorption coefficient ā. Each time sound is bounced off a new surface, its energy is decreased by a proportion determined by the average absorption coefficient ā.

If we know the proportion of energy lost with each bounce and the length of time between bounces, we can calculate the average rate of decay and the reverberation time for a particular room.

Example: Consider a room 5m x 6m x 3m, as diagrammed in Figure 5-8. Let us calculate the decay rate and reverberation time for the octave band centered at 1 kHz.

The volume of the room is 90 cubic meters, and its total surface area is 126 square meters; therefore, the MFP works out to be about 3 meters.

The next step is to list individually the areas and absorption coefficient of the various materials used on room surfaces.

The total surface area is 126 square meters; the total absorption (Sā) adds up to 24.9 absorption units. Therefore, the average absorption coefficient (ā) is 24.9 divided by 126, or .2.

If each reflection results in a decrease in energy of 0.2, the reflected wave must have an equivalent energy of 0.8. A ratio of 0.8 to 1 is equivalent to a loss of 0.97 decibel per reflection. For simplicity, let us call it 1 dB per reflection.

Since the MFP is 2.9 meters, the mean free time must be about 0.008 seconds (2.9/334 = 0.008).

We now know that the rate of decay is equivalent to 1 dB per 0.008 seconds. The time for sound to decay 60 dB must, therefore, be:

$$60 \times 0.008 = 0.48 \text{ seconds.}$$

The Eyring equation in its standard form is shown in Figure 5-9. If this equation is used to calculate the reverberation of our hypothetical room, the answer comes out 0.482 seconds. If the Sabine formula is used to calculate the reverberation time of this room, it provides an answer of 0.535 seconds or a discrepancy of a little more than 10%.

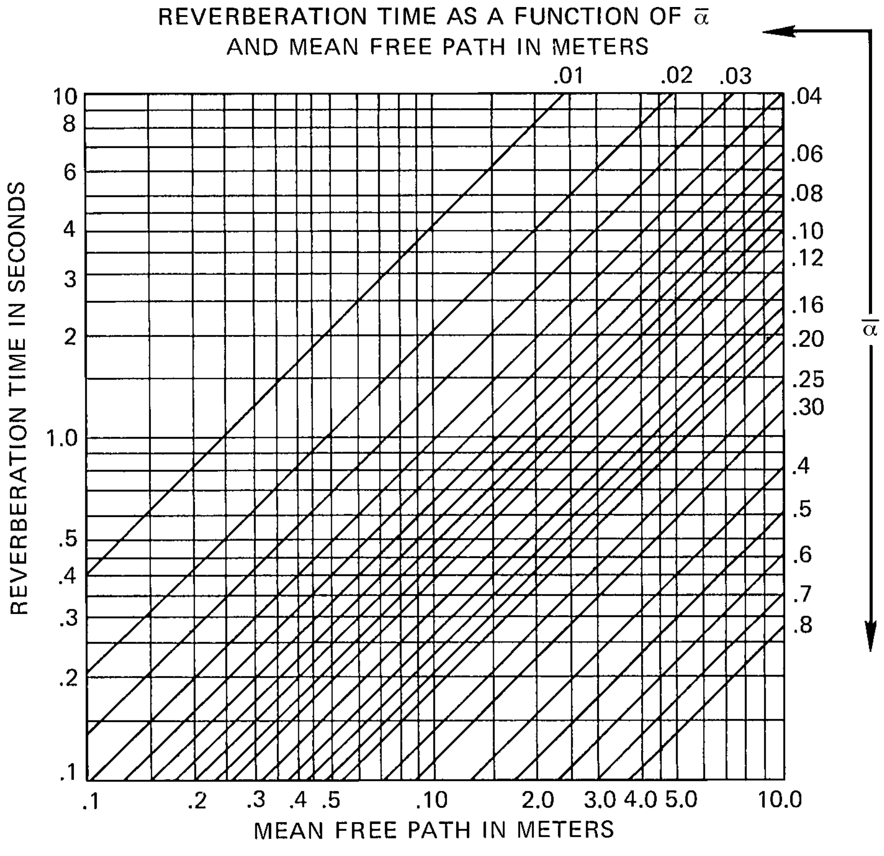

Figure 5-10. Reverberation time chart, SI units

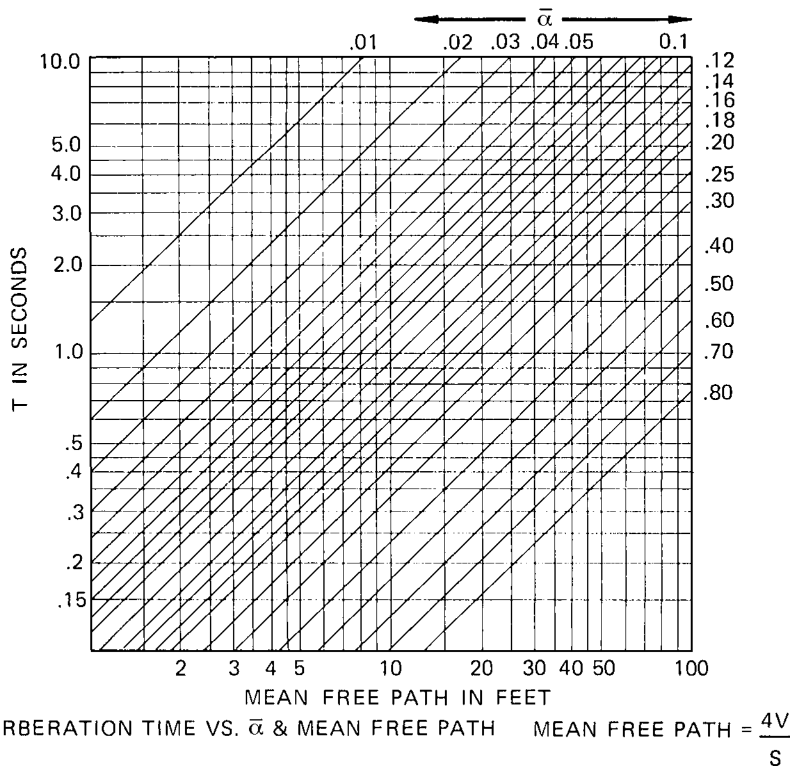

Figure 5-1 1. Reverberation time chart, English units

DESCRIPTION	125	1 kHz	4 kHz
BRICK WALL (18" THICK, UNPAINTED)	.02	.04	.07
BRICK WALL (18" THICK, PAINTED)	.01	.02	.02
INTERIOR PLASTER ON METAL LATH	.02	.06	.03
POURED CONCRETE	.01	.02	.03
PINE FLOORING	.09	.08	.10
CARPETING WITH PAD	.10	.30	.70
DRAPES (COTTON, 2X FULLNESS)	.07	.80	.50
DRAPES (VELOUR, 2X FULLNESS)	.15	.75	.65
ACOUSTIC TILE (5/8", #1 MOUNT)	.15	.70	.65
ACOUSTIC TILE (5/8", #2 MOUNT)	.25	.70	.65
ACOUSTIC TILE (5/8", #7 MOUNT)	.50	.75	.65
TECTUM PANELS (1", #2 MOUNT)	.08	.55	.65
TECTUM PANELS (1", #7 MOUNT)	.35	.35	.65
PLYWOOD PANELING (1/8", 2" AIR SPACE)	.30	.10	.07
PLYWOOD CYLINDERS (2 LAYERS 1/8")	.35	.20	.18
PERFORATED TRANSITE (W/PAD, #7 MOUNT)	.90	.95	.45
OCCUPIED AUDIENCE AREA	.50	.95	.85
UPHOLSTERED THEATRE SEATS ON HARD FLOOR	.45	.90	.70

#1 MOUNT: CEMENTED DIRECTLY TO PLASTER OR CONCRETE.
#2 MOUNT: FASTENED TO NOM. 1" THICK FURRING STRIPS.
#7 MOUNT: SUSPENDED CEILING WITH 16" AIR SPACE ABOVE.

Figure 5-12. Approximate absorption coefficients of common material (averaged and rounded-off from published data)

Rather than go through the calculations, it is much faster to use a simple chart. Charts calculated from the Eyring formula are given in Figures 5-10 and 5-11. Using the chart as a reference and again checking our hypothetical example, we find that a room having a mean free path just a little less than 3 meters and an average absorption coefficient of .2 must have a reverberation time of just a little less than .5 seconds.

Since reverberation time is directly proportional to the mean free path, it is desirable to calculate the latter as accurately as possible. However, this is not the only area of uncertainty in these equations. There is argument among acousticians as to whether published absorption coefficients, such as those of Figure 5-12, really correspond to the random incidence absorption implicit in the Eyring equation. There also is argument over the method used to find the "average" absorption coefficient for a room. In our example, we performed a simple arithmetic calculation to find the average absorption coefficient. It has been pointed out that this is an unwarranted simplification — that the actual state of affairs requires neither an arithmetic average nor a geometric mean, but some relation considerably more complicated than either.

Another source of uncertainty lies in determining the absorption coefficients of materials in situations other than those used to establish the rating. We know, for example, that the total absorption of a single large patch of material is less than if the same amount of material is spread over a number of separated, smaller patches. At higher frequencies, air absorption reduces reverberation time. Figure 5-13 can be used to estimate such deviations above 2 kHz.

A final source of uncertainty is inherent in the statistical nature of the model itself. We know from experience that reverberation time in a large concert hall may be different in the seating area than if measured out near the center of the enclosed space.

With all of these uncertainties, it is a wonder that the standard equations work as well as they do. The confidence limit of the statistical model is probably of the order of 10% in terms of time or decay rate, or ±1 dB in terms of sound pressure level. Therefore, carrying out calculations to 3 or 4 decimal places, or to fractions of decibels, is not only unnecessary but mathematically irrelevant.

Reverberation is only one of the characteristics that help our ears identify the "acoustical signature" of an enclosed space. Some acousticians separate acoustical qualities into three categories: the direct sound, early reflections, and the late-arriving reverberant field.

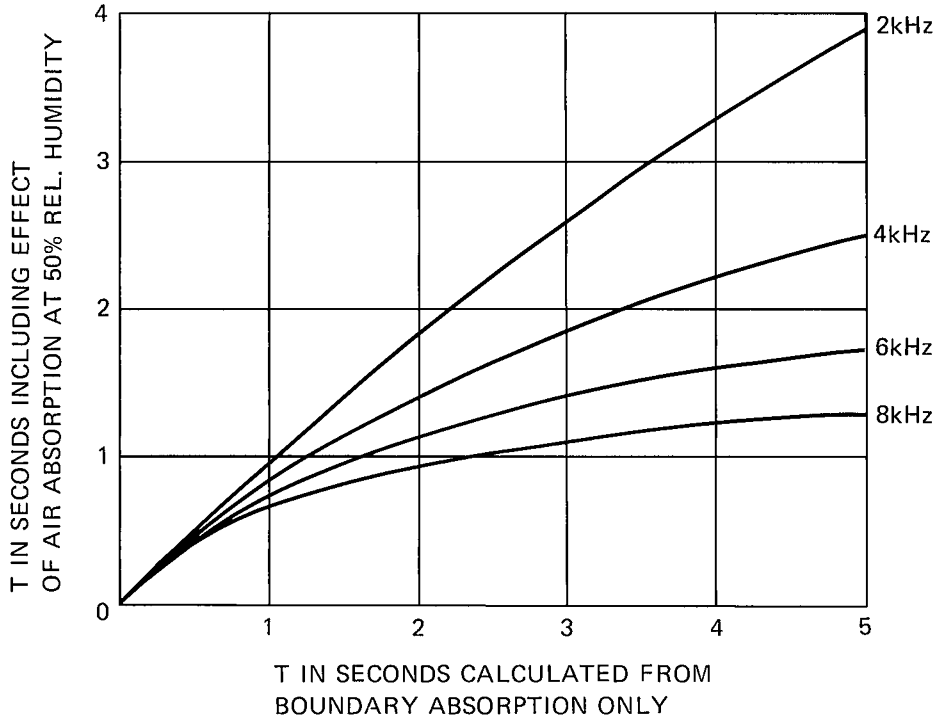

Figure 5-13. Effect of air absorption on calculated reverberation time

Another identifiable characteristic, particularly of small rooms, is the presence of identifiable resonance frequencies. Although this factor is ignored in our statistical model, a room is actually a complicated resonant system very much like a musical instrument. As mentioned previously, if individual resonances are clustered close together in frequency the ear tends to average out peaks and dips, and the statistical model seems valid. At lower frequencies, where resonances may be separated by more than a critical bandwidth, the ear identifies a particular timbral characteristic of that room at a specific listening location.

Since the direct sound field is independent of the room, we might say that the “three R’s” of room acoustics are *reverberation*, *room resonances* and early *reflections*.

The distinction between early reflections and the later reverberation is usually made at some point between 20 and 30 milliseconds after the arrival of the direct sound. Most people with normal hearing find that early reflections are combined with the direct sound by the hearing mechanism, whereas later reflections become identified as a property of the enclosed space. See Figure 5-14. The early reflections, therefore, can be used by the brain as part of the decoding process. Late reverberation, while providing an agreeable aesthetic component for many kinds of music, tends to mask the early sound and interferes with speech intelligibility.

One final characteristic of sound is ignored in all standard equations. Localization of a sound source affects our subjective assessment of the sound field. In the design of sound reinforcement systems, localization is largely disregarded except for a few general rules. It achieves critical importance, however, in the design of multi-channel monitoring and mixdown rooms for recording studios.

Direct and Reverberant Sound Fields

What happens to the inverse square law in a room? As far as the direct sound is concerned (that which reaches a listener directly from the source without any reflections) the inverse square relationship remains unchanged. But in an enclosed space we now have a second component of the total sound field. In our statistical model we assumed that at some distance sufficiently far from the source, the direct sound would be buried in a “soup” of random reflections from all directions. This reverberant sound field was assumed to be uniform throughout the enclosed space.

Figure 5-15 illustrates how these two components of the total sound field are related in a typical situation. We have a sound source radiating uniformly through a hemispherical solid angle. The direct energy radiated by the source is represented by the black dots. Relative energy density is

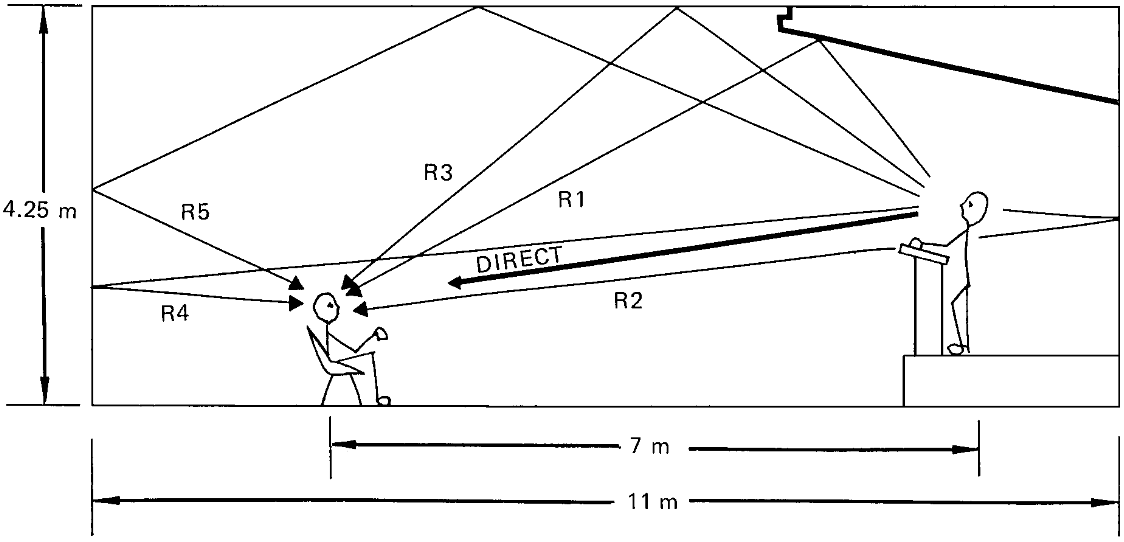

SOUND RAY	DELAY IN MSEC.
DIRECT	0
R1	4.5
R2	9.0
R3	13.0
R4	14.0
R5	18.0

ALL REFLECTIONS SHOWN ARRIVE AT LISTENER'S EAR WITHIN 30 MSEC. AFTER DIRECT SOUND AND, THEREFORE, ARE "EARLY" REFLECTIONS.

Figure 5-14. Early reflections in relation to direct sound

indicated by the density of the dots on the page; near the source they are very close together and become more and more spread out at greater distances from the source.

The reverberant field is indicated by the circle dots. Their spacing is uniform throughout the enclosed space to represent the uniform energy density of the reverberant field.

Near the source the direct field predominates. As one moves farther away, however, the ratio of black dots to circle dots changes until the black dots are so few and far between that their presence can be ignored. In this area one is well into the reverberant field of the room. At some particular distance from the source a zone exists where the densities of the circle and black dots are equal. In the illustration, this zone takes the form of a semicircle; in three-dimensional space, it would take the form of a hemisphere.

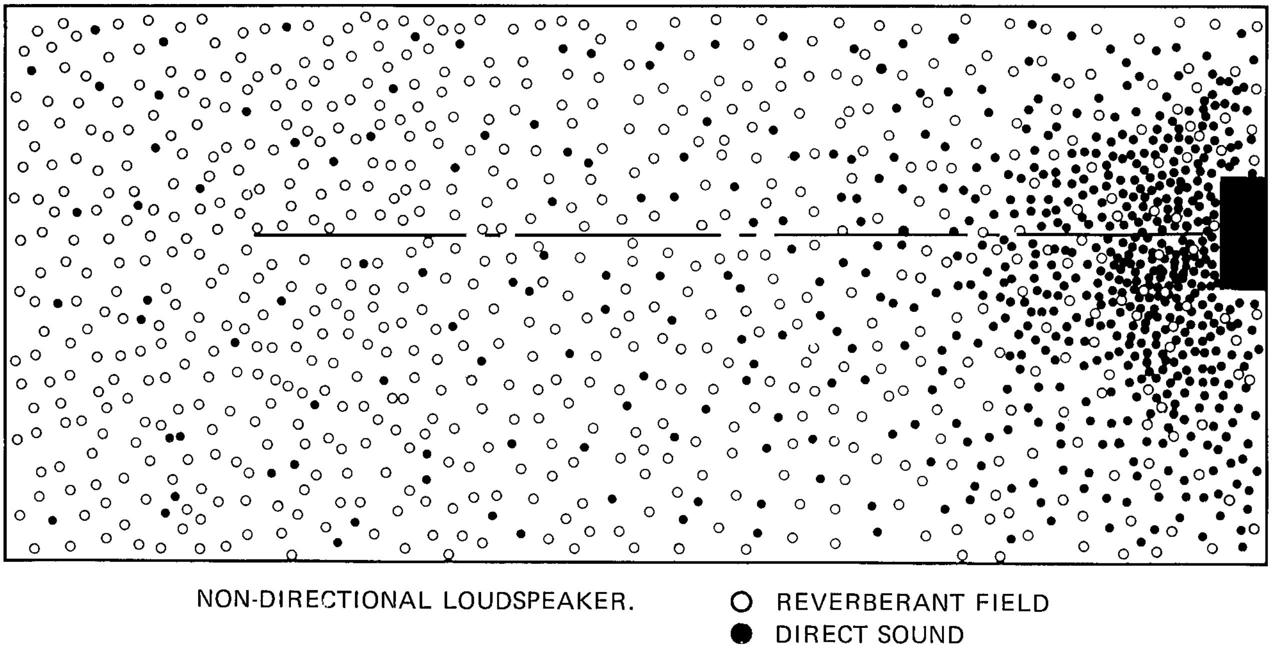

Figure 5-15. Direct and reverberant fields, non-directional loudspeaker

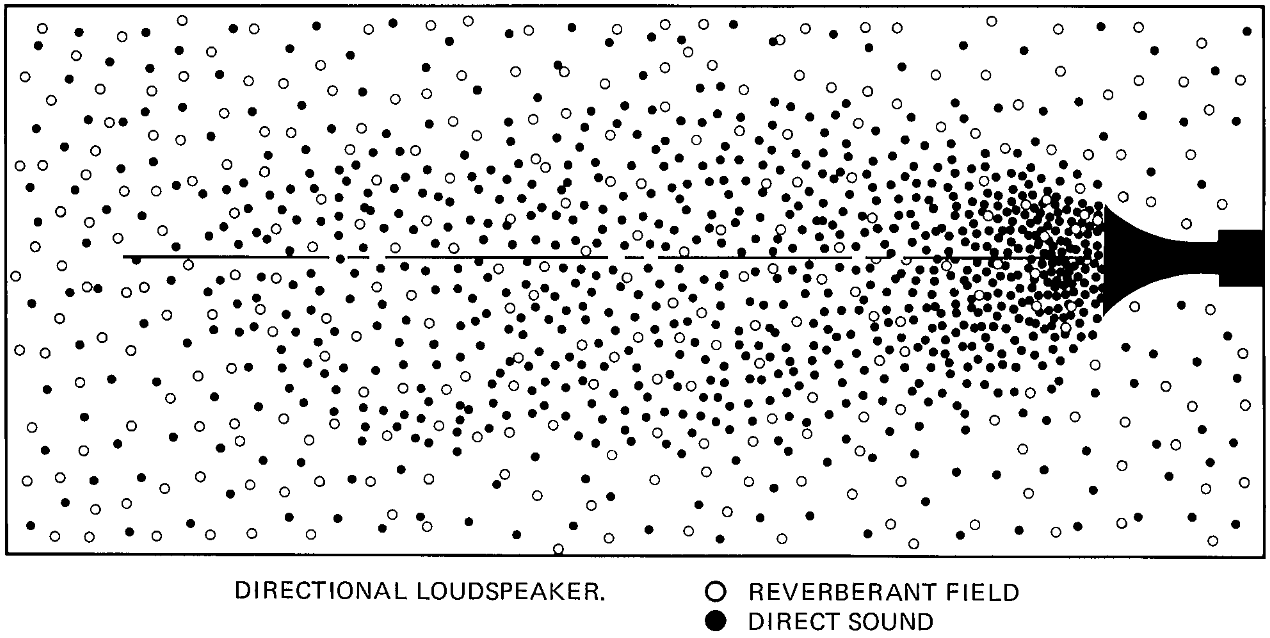

Figure 5-16. Direct and reverberant fields, directional loudspeaker

Critical Distance (D_c)

The distance from the acoustic center to the circle-black boundary is called the *critical distance*. Critical distance is the distance from the acoustic center of a sound source, along a specified axis, to a point at which the densities of direct and reverberant sound fields are equal.

Critical distance is affected by the directional characteristics of the sound source. Figure 5-16 illustrates the same room as in Figure 5-15, but with a more directional loudspeaker. In the instance the circle-black boundary no longer describes a semicircle. The black dots are concentrated along the major axis of the loudspeaker and maintain their dominance over the circle dots for a substantially greater distance than in the preceding example. However, at 45° or greater off the major axis, the black dots die out more rapidly and the circle-black boundary is much closer to the source.

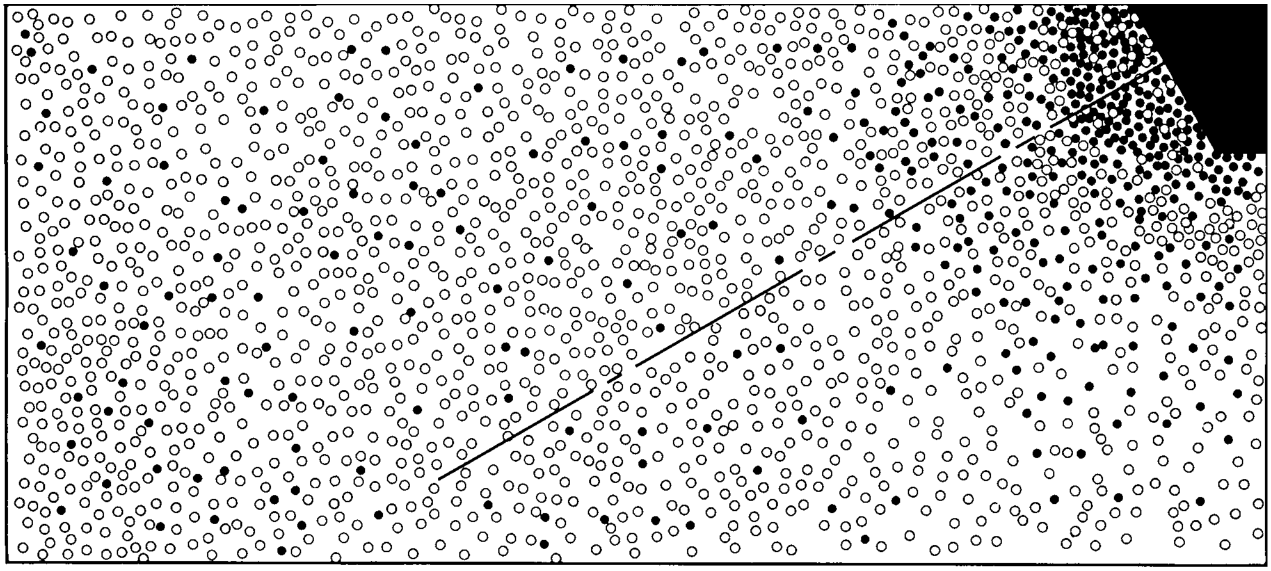

Figure 5-17. Direct and reverberant fields, live room

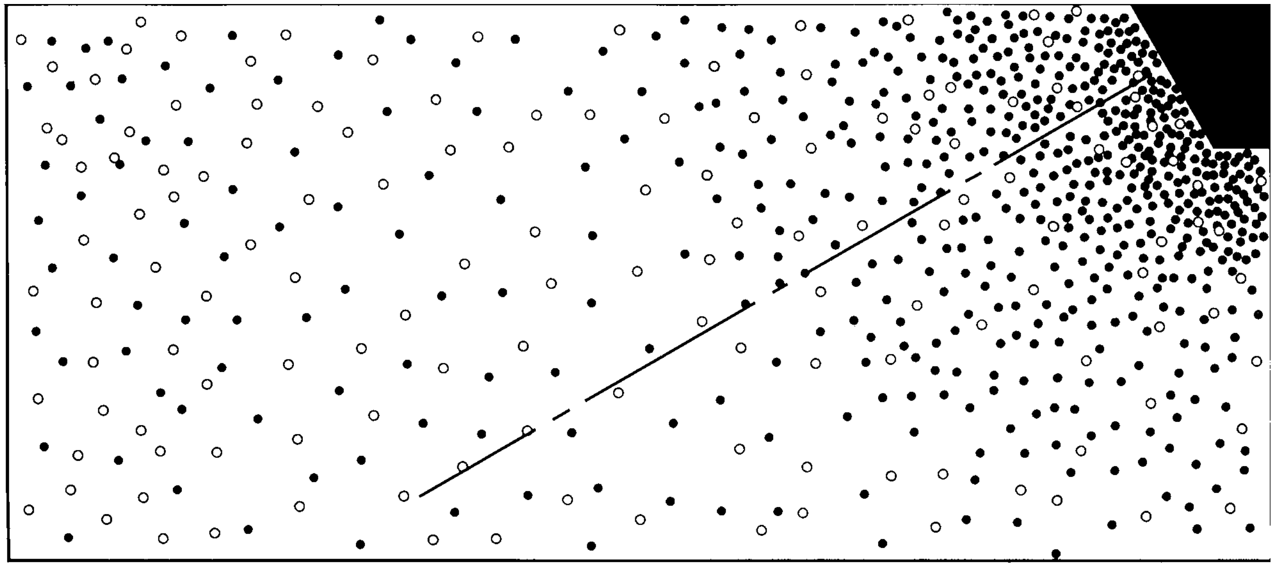

Figure 5-18. Direct and reverberant fields, dead room

Critical distance also is affected by the absorption coefficients of room boundary surfaces. Figures 5-17 and 5-18 illustrate the same sound source in the same size room. The difference is that in the first illustration the room surfaces are assumed to be highly reflective, while in the second they are more absorptive. The density of the black dots representing the direct field is the same in both illustrations. In the live room, because energy dissipates quite slowly, the reverberant field is relatively strong. As a result, the circle-black boundary is pushed in close to the sound source. In the second example sound energy is absorbed more rapidly, and the reverberant field is not so strong. Therefore, the circle-black boundary is farther from the source.

Even though the direct field and the reverberant field are produced by the same sound source, the sound is so well scrambled by multiple reflections that the two components are non-coherent. This being so, total rms sound pressure measured at the critical distance should be 3 dB greater than that produced either by the direct field or reverberant field alone.

Within the normal variations of statistical averaging, such is the case in actual rooms. The behavior of loudspeakers in rooms was described in great detail in 1948 by Hopkins and Stryker (6). Their calculations of average sound pressure level versus distance are illustrated in Figure 5-19. A great deal of useful information has been condensed into this single chart. Sound pressure is given in terms of the level produced by a point source radiating one acoustic watt. The straight diagonal line shows the decrease in sound pressure with distance that would be measured in open air.

The Room Constant (R)

The various shelving curves are labeled with numbers indicating a new quantity, the *room constant*. This will be defined in subsequent paragraphs. Essentially, R is a modified value of the total absorption in the room [$R = S\bar{a}/(1 - \bar{a})$]. A small room constant indicates a very live room, and a large room constant describes a room having a great deal of absorption.

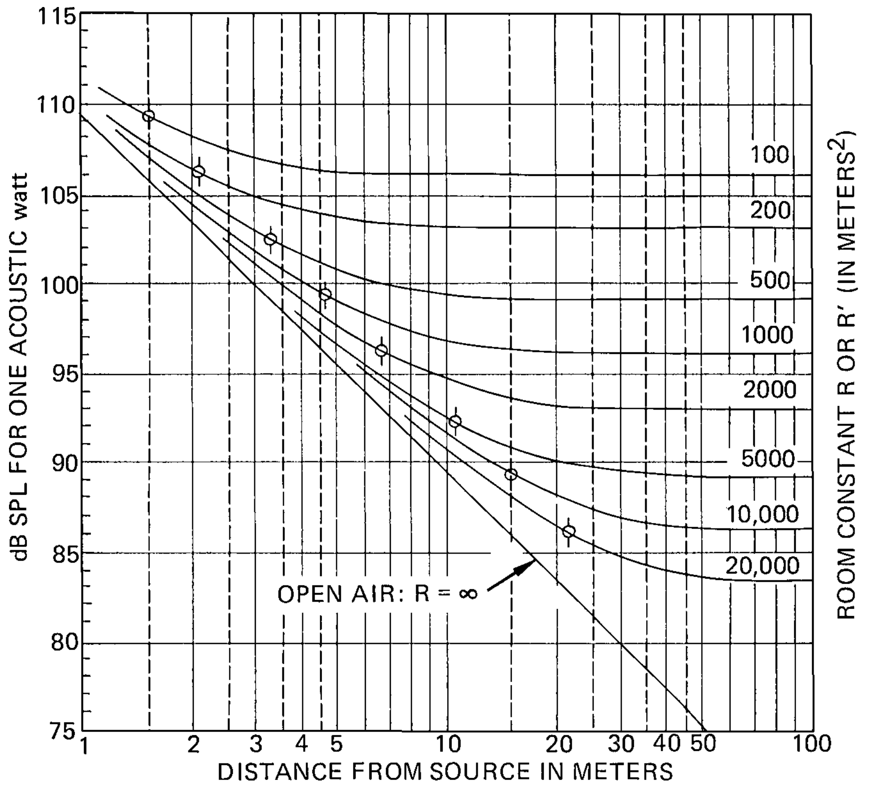

Figure 5-19. SPL (point source radiating one acoustic watt) vs. R and distance from source

Suppose we place a small non-directional sound source in a room having R = 200 m^2. If we measure the sound level at a distance 0.25 meter from the acoustic center and then proceed to walk in a straight line away from the source, the level will at first decrease as the square of the distance. However, about 1 meter from the source, the inverse square relationship no longer applies. At distances of 6 meters or more from the source, there is no substantial change in sound pressure at all because we are well into the reverberant field and the direct sound no longer has a perceptible effect upon our reading.

If we reverse our path and walk back toward the source from a distance of 12 or 15 meters, sound pressure at first remains unchanged and then gradually begins to climb until, at a distance about 2 meters from the source, it has increased 3 dB above the reverberant field reading. This position, indicated by the mark on the curve, is the critical distance.

The graph of Figure 5-20 is a universal relationship in which critical distance is used as the measuring stick. It can be seen that the effective transition zone from the reverberant field to the direct field exists over a range from about one-half the critical distance to about twice the critical distance. At one-half the critical distance, the total sound field is 1 dB greater than the direct field alone; at twice the critical distance, the total sound field is 1 dB greater than the reverberant field alone.

The ratio of direct to reverberant sound can be calculated from the simple equation shown below the chart, or estimated directly from the chart itself. For example, at four times D_C the direct sound field is 12 dB less than the reverberant sound field. At one-half D_C, the direct sound field is 6 dB greater than the reverberant sound field.

Remember that, although critical distance depends on the directivity of the source and the absorption characteristics of the room, the relationships expressed in Figure 5-19 remain unchanged. Once D_C is known, all other factors can be calculated without regard to room characteristics. With a directional sound source, however, a given set of calculations can be used only along a specified axis. On any other axis the critical distance will change and must be recalculated.

Let us investigate these two factors in some detail: first the room constant R, and then the directivity factor Q.

We have already mentioned that the room constant is related to the total absorption of an enclosed space, but that it is different from total absorption represented by $S\bar{a}$.

One way to understand the room constant is first to consider that the total average energy density in a room is directly proportional to the power of the sound source and inversely proportional to the total absorption of the boundary surfaces. This

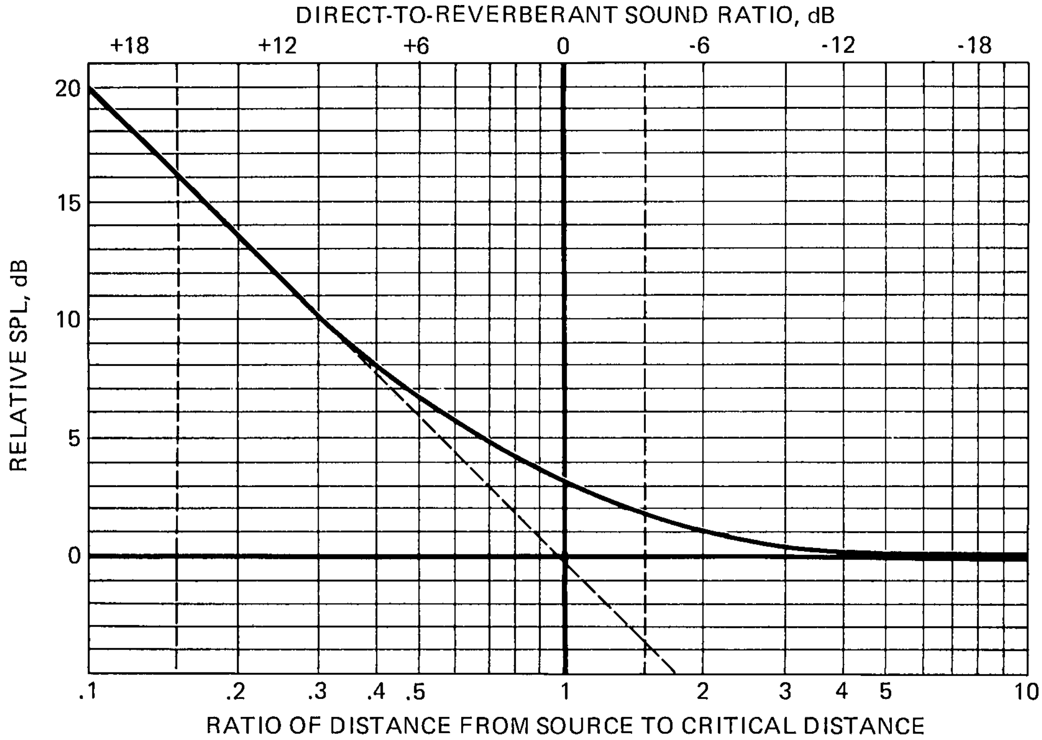

CALCULATED FROM: $10\log(1+1/x^2)$ WHERE x IS RATIO OF DISTANCE FROM SOURCE TO CRITICAL DISTANCE

Figure 5-20. Relative SPL vs. distance from source in relation to critical distance

relationship is often indicated by the simple expression: 4W/cSā. *W* represents the output of the sound source, and the familiar expression *Sā* indicates the total absorption of the boundary surfaces.

Remembering our statistical room model, we know that sound travels outward from a point source, following the inverse square law for a distance equal to the mean free path, whereupon it encounters a boundary surface having an absorption coefficient ā. This direct sound has no part in establishing the reverberant sound field. The reverberant field proceeds to build up only after the first reflection.

But the first reflection absorbs part of the total energy. For example, if ā is 0.2, only 80% of the original energy is available to establish the reverberant field. In other words, to separate out the direct sound energy and perform calculations having to do with the reverberant field alone, we must multiply *W* by the factor *(1 - ā).*

This results in the equation:

$$E_{rev} = \frac{4W(1-\bar{\alpha})}{cS\bar{\alpha}}$$

Note that the equation has nothing to do with the directivity of the sound source. From previous examples, we know that the directivity of the source affects critical distance and the contour of the boundary zone between direct and reverberant fields. But power is power, and it would seem to make no difference whether one acoustic watt is radiated in all directions from a point source or concentrated by a highly directional horn.

Is this really true? The equation assumes that the porportion of energy left after the first reflection is equivalent to W(1 - ā). Suppose we have a room in which part of the absorption is supplied by an open window. Our sound source is a highly directional horn located near the window. According to the equation the energy density of the reverberant field will be exactly the same whether the horn is pointed into the room or out of the window! This obviously is fallacious, and is a good example of the importance of understanding the basis for acoustical equations instead of merely plugging in numbers.

$$E_{rev} = \frac{4W}{cR}\,*$$

This gives the average energy density of the reverberant field alone. If we let R = Sa/(1 - a), the equation becomes:

* With room dimensions in meters and acoustic power in watts, the reverberant field level in dB is: L_{rev} = 10 log W/R+ 126 dB. See Figure 5-21.

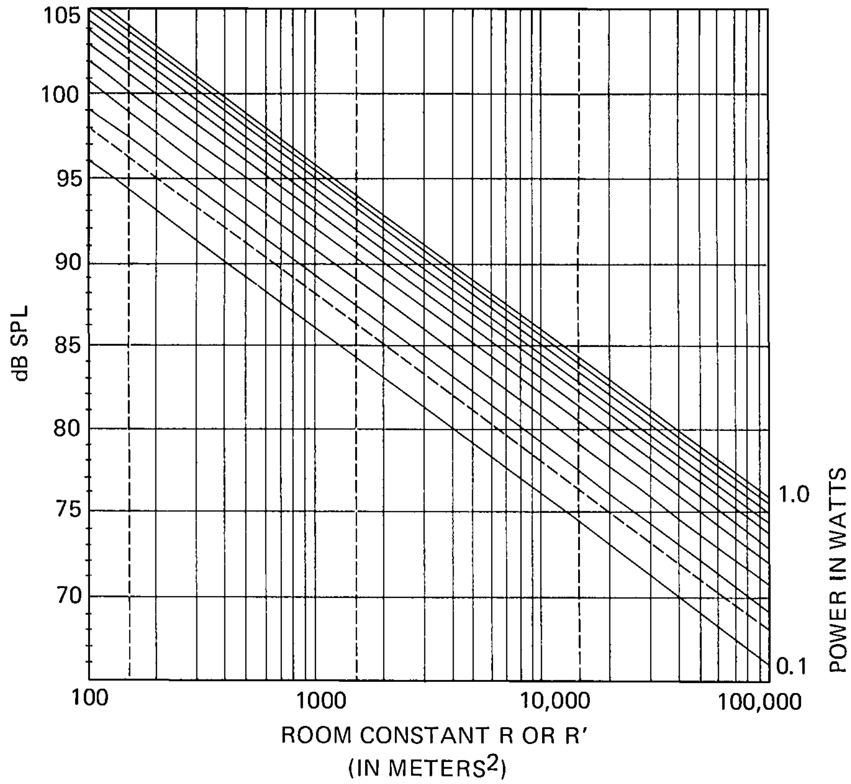

Figure 5-21. Steady-state reverberant field SPL vs. acoustic power and room constant

We can agree that if the source of sound in a given room is non-directional, the equation for *R* is probably accurate for all practical purposes. It would also seem that the equation could be used for a room in which absorption was uniformly distributed on all boundary surfaces, regardless of the directivity of the source. Where we run into trouble is the situation of a directional source and absorption concentrated in restricted areas. The description is exactly that of a classical concert hall in which almost all absorption is provided in the audience area and in which the sound system designer has endeavored to concentrate the power from the loudspeakers directly into the audience.

One could go through laborious calculations to arrive at the intensity of the reverberant field by taking reflections one by one. In practice, however, it is usually sufficient to make an educated guess as to the amount of energy absorbed in the first reflection. We can denote the absorption coefficient of this first reflection as *a'*. The energy remaining after the first reflection must then be proportional to (1 - a'). This allows us to write an expression for the effective room constant designated by the symbol *R'*:

$$R' = S\bar{a}/(1 - a').$$

The importance of determining the room constant as accurately as possible lies in the fact that it not only allows us to calculate the maximum level of a given sound system in a given room, but also enters into our calculations of critical distance and direct-to-reverberant sound ratio.

Although not explicitly stated, *R'* can be used in any of the equations and charts in which the room constant appears, Figures 5-19, 21, and 22, for example. In most situations, the standard equation for *R* will seem to be a reasonable approximation of the condition that exists. In each case, however, an examination of the room geometry and source directivity should be made, and the designer should try to estimate what will really happen to the sound energy after the first reflection.

Figures 5-21 and 5-22 present some reverberant field relationships in graphical form. For example, if we know the efficiency of a sound source, and hence its acoustical power output in watts, we can measure the sound pressure level in the reverberant field and determine the room constant directly. Or, if the room is not accessible to us, and a description of the room enables us to estimate the

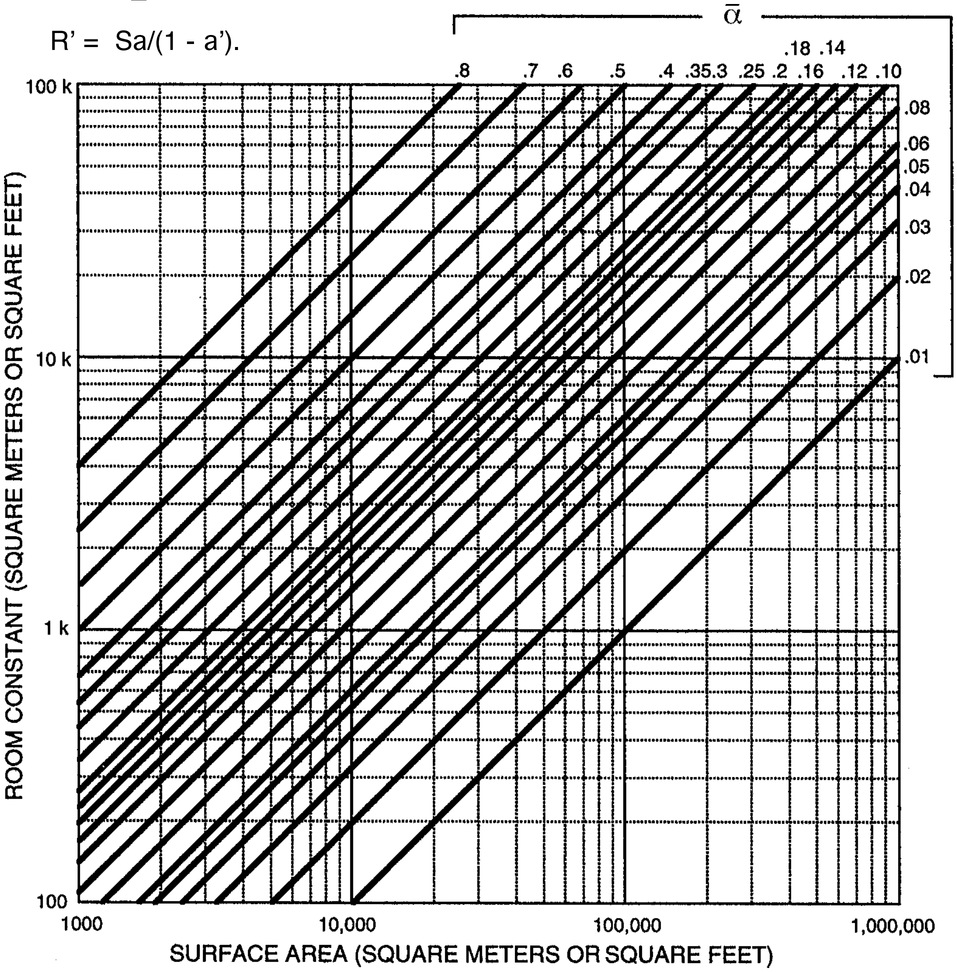

Figure 5-22. Room constant vs. surface area and ā

room constant with some confidence, then we can estimate the sound pressure level that will be produced in the reverberant field of the room for a given acoustical power output.

Figure 5-22 enables us to determine by inspection the room constant if we know both $\bar{a}$ and the total surface area. This chart can be used with either SI or English units.

If both room constant and directivity factor of a radiator are known, the critical distance can be solved directly from the following equation:

$$D_C = .14\sqrt{QR}$$

This equation may be used with either SI or English units, and a graphical solution for it is shown in Figure 5-23. It is helpful to remember that the relationship between directivity index and critical distance is in a way very similar to the inverse square law: an increase of 6 dB in directivity (or a "times-four" increase in *Q*) corresponds to a doubling of the critical distance. One might think of this as the "direct square law".

A second useful factor to keep in mind is that the directivity index of a person talking, taken in the 1 kHz range along the major axis, is about 3 dB. For convenience in sound system calculations, we normally assume the Q of the talker to be 2.

These two facts can be used to make reasonably accurate acoustical surveys of existing rooms without equipment. All that is needed is the cooperation of a second person — and a little experience. Have your assistant repeat a word or count slowly in as even a level as possible. While he is doing this, walk directly away from him while carefully listening to the intensity and quality of his voice. With a little practice, it is easy to detect the zone in which the transition is made from the direct field to the reverberant field. Repeat the experiment by starting at a considerable distance away from the talker, well into the reverberant field, and walking toward him. Again, try to zero in on the transition zone.

After two or three such tries you may decide, for example, that the critical distance from the talker in that particular room is about 4 meters. You know that a loudspeaker having a directivity index of 3 dB will also exhibit a critical distance of 4 meters along its major axis in that room. To extend the critical distance to 8 meters, the loudspeaker must have a directivity index of 9 dB.

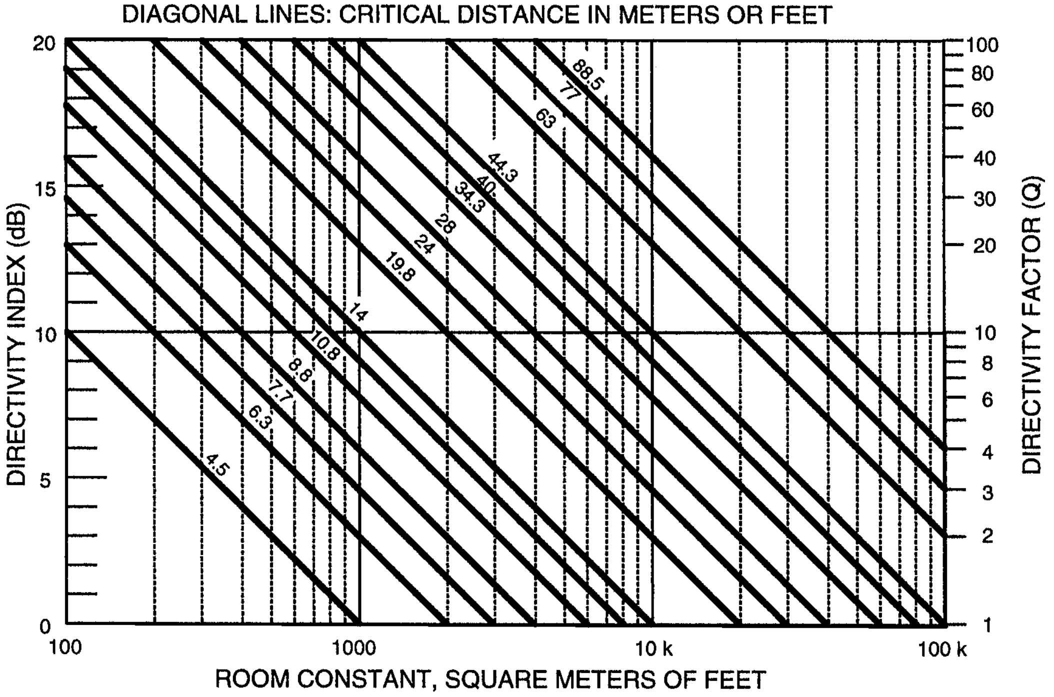

EQUATIONS: CRITICAL DISTANCE = $0.14\sqrt{QR}$ DIRECTIVITY INDEX (dB) = 10 log Q

NOTE: EQUATIONS AND GRAPH CAN BE USED WITH ENGLISH OR SI UNITS.
TO CONVERT GRAPH SCALES TO MORE CONVENIENT VALUES FOR SI CALCULATIONS, DIVIDE CRITICAL DISTANCES BY 10 AND ROOM CONSTANTS BY 100.

Figure 5-23. Critical distance as a function of room constant and directivity index or directivity factor

Once the critical distance is known, the ratio of direct to reverberant sound at any distance along that axis can be calculated. For example, if the critical distance for a talker is 4 meters, the ratio of direct to reverberant sound at that distance is unity. At a distance of 8 meters from the talker, the direct sound field will decrease by 6 dB by virtue of inverse square law, whereas the reverberant field will be unchanged. At twice critical distance, therefore, we know that the ratio of direct to reverberant sound must be -6 dB. At four times D_C, the direct-to-reverberant ratio will obviously be -12 dB.

Statistical Models vs. the Real World

We stated earlier that a confidence level of about 10% allowed us to simplify our room calculations significantly. For the most part, this is true; however, there are certain environments in which errors may be quite large if the statistical model is used. These are typically rooms which are acoustically dead and have low ceilings in relation to their length and width. Hotel ballrooms and large meeting rooms are examples of this. Even a large pop recording studio of more regular dimensions may be dead enough so that the ensemble of reflections needed to establish a diffuse reverberant field simply cannot exist. In general, if the average absorption coefficient in a room is more than about 0.2, then a diffuse reverberant field will not exist. What is usually observed in such rooms is data like that shown in Figure 5-24.

Peutz (9) has developed an empirical equation which will enable a designer to estimate the approximate slope of the attenuation curve beyond D_C in rooms with relatively low ceilings and low reverberation times:

$$\Delta \approx \frac{0.4\sqrt{V}}{h\,T_{60}}\ \text{dB}$$

In this equation, *D* represents the additional fall-off in level in dB per doubling of distance beyond D_C. *V* is the volume in meters³, *h* is the ceiling height in meters, and T_{60} is the reverberation time in seconds. In English units (*V* in ft³ and *h* in feet), the equation is:

$$\Delta \approx \frac{0.22\sqrt{V}}{h\,T_{60}}\ \text{dB}$$

As an example, assume we have a room whose height is 3 meters and whose length and width are 15 and 10 meters. Let us assume that the reverberation time is one second. Then:

$$\Delta \approx \frac{0.4\sqrt{450}}{3\,(1)} = 2.8\ \text{dB}$$

Thus, beyond D_C we would observe an additional fall-off of level of about 3 dB per doubling of distance.

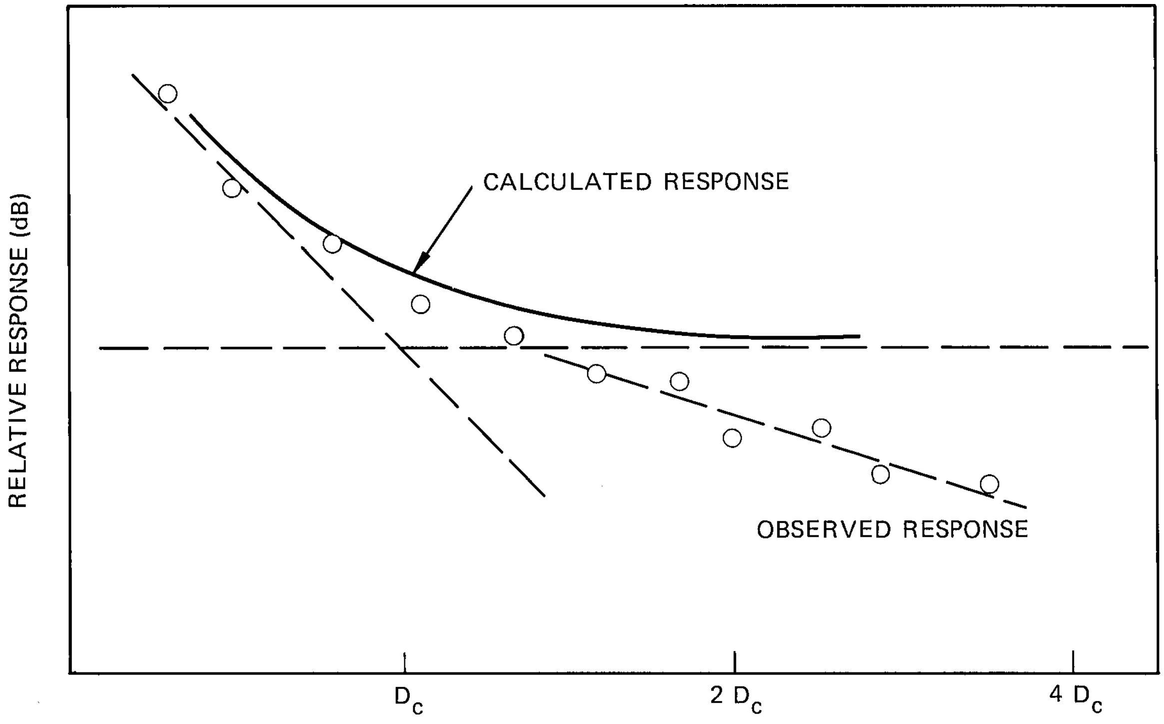

Figure 5-24. Attenuation with distance in a relatively dead room

Chapter 6: Behavior of Sound Systems Indoors

Introduction

The preceding five chapters have provided the groundwork on which this chapter is built. The "fine art and science" of sound reinforcement now begins to take shape, and many readers who have patiently worked their way through the earlier chapters will soon begin to appreciate the disciplines which have been stressed.

The date at which sound reinforcement grew from "public address by guesswork" to a methodical process in which performance specifications are worked out in advance was marked by the publication in 1969 of a paper titled "The Gain of a Sound System," by C. P. and R. E. Boner (4). It describes a method of calculating potential sound system gain, and that method has since become a fundamental part of modern sound system design. The following discussion is based on the Boner paper. Certain points are expanded, and examples are given that require calculations more complicated than those in the original study. Also discussed is the relation between theoretically achievable system gain and practical operating parameters of typical indoor sound systems.

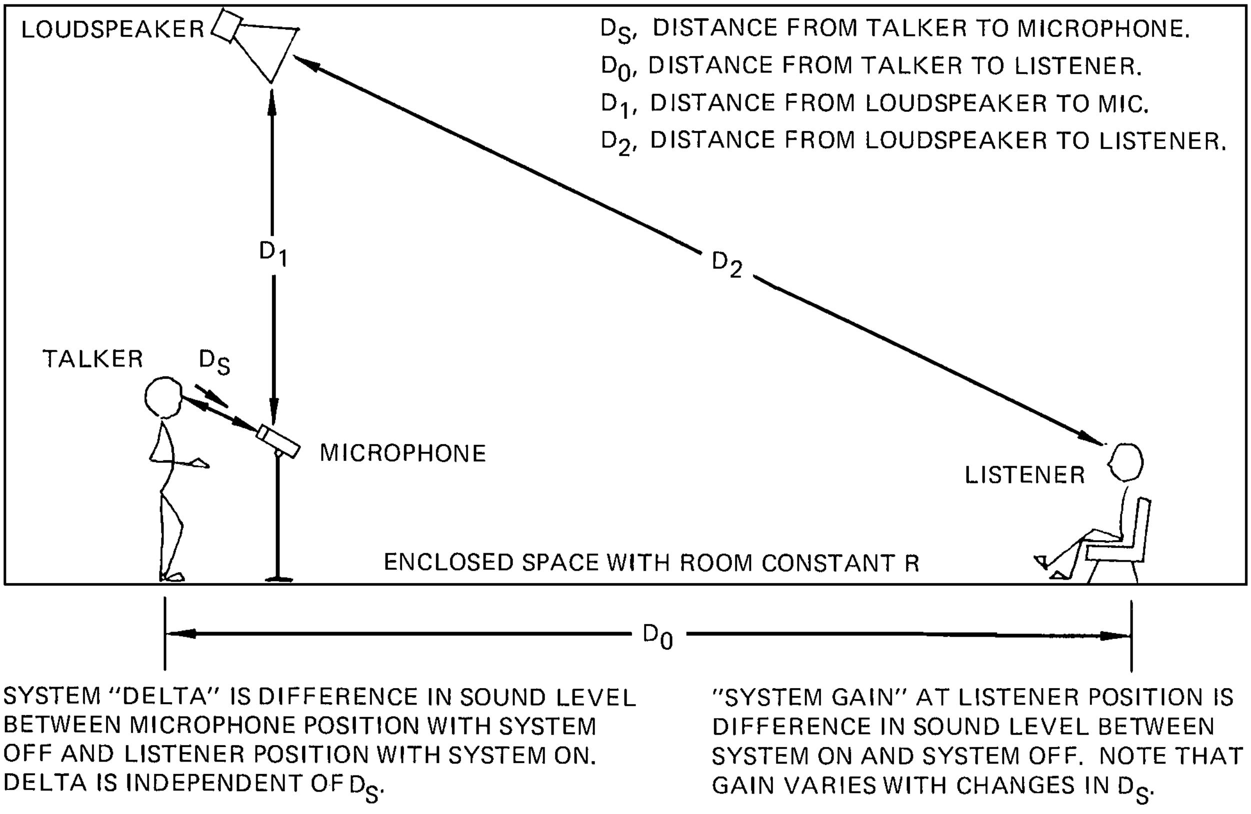

Figure 6-1. An indoor sound system

Acoustical Feedback and Potential System Gain

Just as in the outdoor case studied earlier, if we have a microphone/amplifier/loudspeaker combination in the same room and gradually turn up the gain of the amplifier to a point approaching sustained feedback, the electrical frequency response of the system changes with the gain setting. The effect results from an acoustic feedback path between the loudspeaker and the microphone. As a person talks into the microphone, the microphone hears not only the direct sound from the talker, but the reverberant field produced by the loudspeaker as well.

The purpose of using high-quality loudspeakers and microphones having smooth response characteristics, and sound system equalization (apart from achieving the desired tonal response) is to smooth out all of the potential feedback points so that they are evenly distributed across the audible frequency range. When this has been done, there should be as many negative feedback points as positive feedback points, and the positive feedback points should all reach the level of instability at about the same system gain.

We might expect this to average out in such a way that the level produced by the loudspeaker reaching the microphone can never be greater than that produced by the talker without causing sustained oscillation. In other words, we assume that the extra gain supplied by all the positive feedback spikes is just balanced out by the loss caused by all the negative feedback dips.

If the Boner criteria for optimum system geometry are followed, the microphone will be close to the talker so that it hears mostly direct sound from the talker. It will be far enough from the loudspeaker to be well into the reverberant field of the loudspeaker, so that direct sound from the loudspeaker is not an appreciable factor in triggering system feedback. Assuming that listeners are also in the reverberant field of the loudspeaker, it follows that the sound level in the listening area with the system turned on cannot be greater than that of the unaided talker at the microphone position with the system turned off. Using the Boner concept of system *delta*, the situation at maximum gain corresponds to a delta of unity. (Delta is defined as the difference in decibels between sound level at the system microphone with system off and the level in the audience area with system on. See Figure 6-1).

Although we have described these as conditions of maximum potential system gain, it is possible in practice to achieve a delta greater than unity. For example, if a directional microphone is used it can discriminate against the reverberant field and allow another 3 to 4 dB of system gain. Another possibility is to place the listener in the direct field of the loudspeaker, allowing a further increase in system gain. If the level of the reverberant field is lower in the performing area than in the listening area, additional system gain also results. This situation is described by the Boners as a room constant in the microphone area different from that in the seating area. Similar results may be noted in rooms having large floor areas, relatively low ceilings, and substantial sound absorption. In such rooms, as we have seen, sound from a point source tends to dwindle off beyond D_C at a rate of 2 or 3 dB for each doubling of distance rather than remaining constant in level.

Still another way to increase gain is to electrically suppress the positive feedback frequencies individually with very narrow bandwidth filters. If one could channel all energy into the negative feedback frequencies, the potential system gain would theoretically become infinite! Unfortunately, the acoustic feedback path is not stable enough to permit this degree of narrow-band equalization.

In all other situations, a gain setting is reached at which sustained oscillation occurs. By definition, maximum system gain is reached just below this point. However, the system cannot be operated satisfactorily at a point just below oscillation because of its unpleasant comb-filter response and the prolonged ringing caused by positive feedback peaks. To get back to reasonably flat electrical response and freedom from audible ringing, it usually is recommended that a properly equalized system be operated about 6 dB below its maximum gain point. Even an elaborately tuned system using narrow-band filters can seldom be operated at gains greater than 3 dB below sustained oscillation.

Sound Field Calculations for a Small Room

Consider the room shown in Figure 6-2. This is a typical small meeting room or classroom having a volume less than 80 m^3. The average absorption coefficient $\bar{a}$ is 0.2. Total surface area is 111 m^2. The room constant, therefore, is 28 m^2.

From the previous chapter, we know how to calculate the critical distance for a person talking (nominal directivity index of 3 dB). In the example given, D_C for a source having a directivity index of 3 dB is 1 meter.

The figure also shows geometrical relationships among a talker, a listener, the talker's microphone and a simple wall-mounted loudspeaker having a directivity index of 6 dB along the axis pointed at the listener. The microphone is assumed to be omnidirectional.

Step 1: Calculate relative sound levels produced by the talker at microphone and listener.

We begin with the sound system off. Although the calculations can be performed using only relative levels, we will insert typical numbers to get a better feel for the process involved.

The microphone is .6 meter from the talker, and at this distance, the direct sound produces a level of about 70 dB. Since D_C for the unaided talker is only 1 meter, the microphone distance of .6 meter lies in the transition zone between the direct field and the reverberant field of the talker. By referring to Figure 6-3, we note that the combined sound levels of the reverberant field and the direct field at a distance of .6 meter must be about 1 dB greater than the direct field alone. Therefore, since we have assumed a level of 70 dB for the direct field only, the total sound level at the microphone must be 71 dB.

Next, we use a similar procedure to calculate the sound level at the listener's position produced by an unaided talker:

The listener is located 4.2 meters from the talker, more than 3 times the critical distance of 1 meter, and therefore, well into the reverberant field of the talker. We know that the sound level anywhere in the reverberant field is equal to that produced by the direct field alone at the critical distance. If the level produced by direct sound is 70 dB at a distance of .6 meter, it must be 4.6 dB less at a distance of 1 meter, or 65.4 dB, and the level of the reverberant field must also be 65.4 dB. The sound level produced by the unaided talker, at the listener's position, therefore is 65.4 dB.

At this point, let us consider two things about the process we are using. First, the definition of critical distance implies that sound level is to be measured with a random-incidence microphone. (For example, we have chosen a non-directional system microphone so that it indeed will "hear" the same sound field as that indicated by our calculations). Second, we have worked with fractions of decibels to avoid confusion, but it is important to remember that the confidence limits of our equations do not extend beyond whole decibel values, and that we must round off the answer at the end of our calculations.

Step 2:The sound field produced by the loudspeaker alone.

Now let us go back to our example and calculate the sound field produced by the loudspeaker. Our system microphone is still turned off and we are using an imaginary test signal for the calculations. We can save time by assuming that the test signal produces a sound level at the microphone of 71 dB — the same previously assumed for the unaided talker.

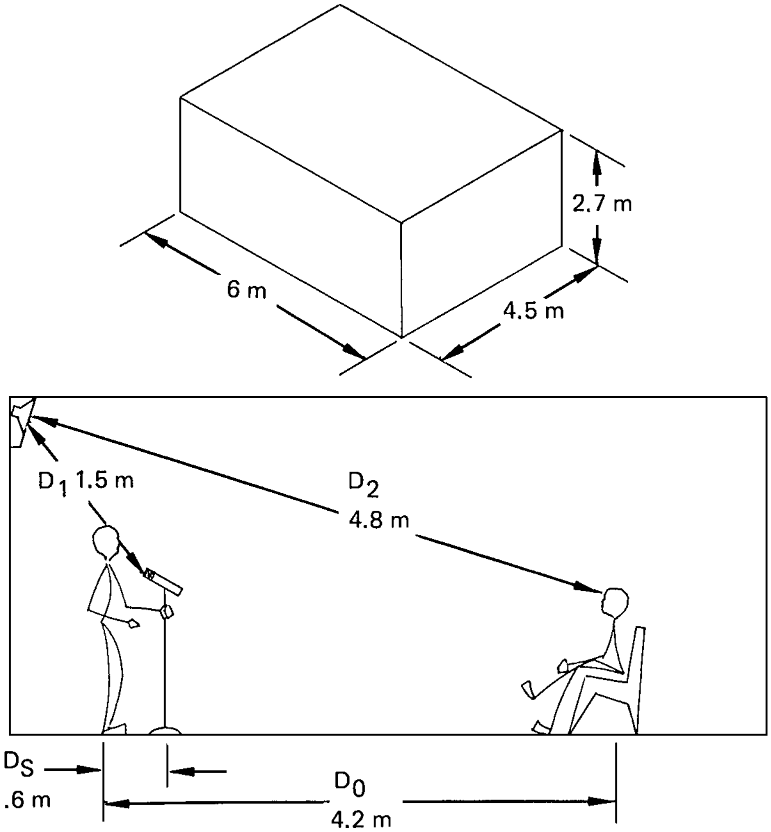

Figure 6-2. Indoor sound system gain calculations

The loudspeaker is mounted at the intersection of wall and ceiling. Its directivity index, therefore, is assumed to be 6 dB. In this room, the critical distance for the loudspeaker is 1.4 meters. This is almost the same as the distance from the loudspeaker to the microphone. Since the microphone is located at the loudspeaker's critical distance, and since we have assumed a level of 71 dB for the total sound field at this point, the direct field at the microphone must equal 71 dB minus 3 dB, or 68 dB.

The listener is 4.8 meters from the loudspeaker (more than 3 times the critical distance) and therefore, well into the reverberant field of the loudspeaker. We know that the level in the reverberant field must equal the level of the direct field alone at the critical distance. The sound level at the listener's position produced by the loudspeaker must, therefore, be 68 dB.

Step 3: Potential acoustic gain is now considered.

Since we deliberately set up the example to represent the condition of maximum theoretical gain for a properly equalized system, we can use these same figures to calculate the difference in level at the listener's position between the unaided talker and the talker operating with the system turned on. We have calculated that the unaided talker produces a level at the listener's position of 65.4 dB. We have also calculated that the level produced by the loudspeaker at the listener's position is 68 dB. The acoustic gain of the system for this specific set of conditions must be the difference between the two, or only 2.6 dB. Obviously such a sound reinforcement system is not worth turning on in the first place.

Note that system acoustical gain is dependent upon the distance from the microphone to the talker. A more general concept is that of system delta. According to the Boner paper, the maximum theoretical D of a properly equalized system is unity. In our example, D works out to be -3 dB. Why?

The Boners emphasize that for maximum system gain the microphone must be in the direct field of the talker and in the reverberant field of the loudspeaker. But in our example, the microphone is not quite in the direct field of the talker and is located at the critical distance of the loudspeaker! To achieve more gain, we might move the microphone to a distance .3 meter from the talker and use a more directional loudspeaker. This would result in a 3 dB increase in D and a potential acoustic gain at the listener's position of about 9 dB.

In practice, however, we cannot operate the system at a point just below sustained feedback. Even if we modify the system as described above, our practical working gain will only be about 3 dB. Our calculations merely prove what we could have guessed in advance: in a room this small, where an unaided talker can easily produce a level of 65 dB throughout the room, a sound system is unnecessary and of no practical benefit.

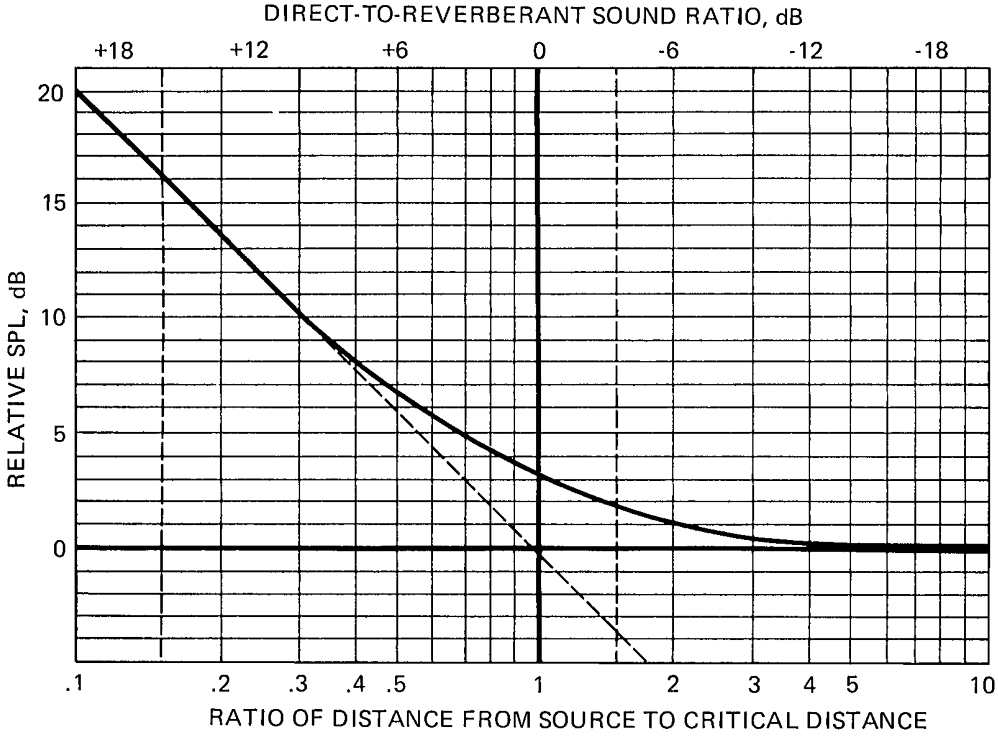

Figure 6-3. Relative SPL vs. distance from source in relation to critical distance

Calculations for a Medium-Size Room

Consider a more typical (and more complicated) situation in which the sound system is used in a larger room and in which a directional microphone is employed. Figures 6-4 and 6-5 show a room having a volume of 918 m³, a total surface area of 630 m² and $\bar{a}$ = 0.15.

The first step is to calculate the room constant, and we would do well to examine the actual distribution of absorptive material in the room. Chapter 5 explains why the effective room constant R' in a particular situation may vary substantially from the figure given by the equation $R = S\bar{a}/(1 - \bar{a})$. Rather than complicate the example, however, assume that the equation really does work and that the room constant is about 110 m².

The next step is to calculate critical distances for the talker and the loudspeaker. Since the loudspeaker does not have a uniform radiation pattern, we must calculate its critical distance at the particular angle in which we are interested. Figure 6-5 shows the distances involved and the geometrical relationships between talker, microphone, loudspeaker and listener.

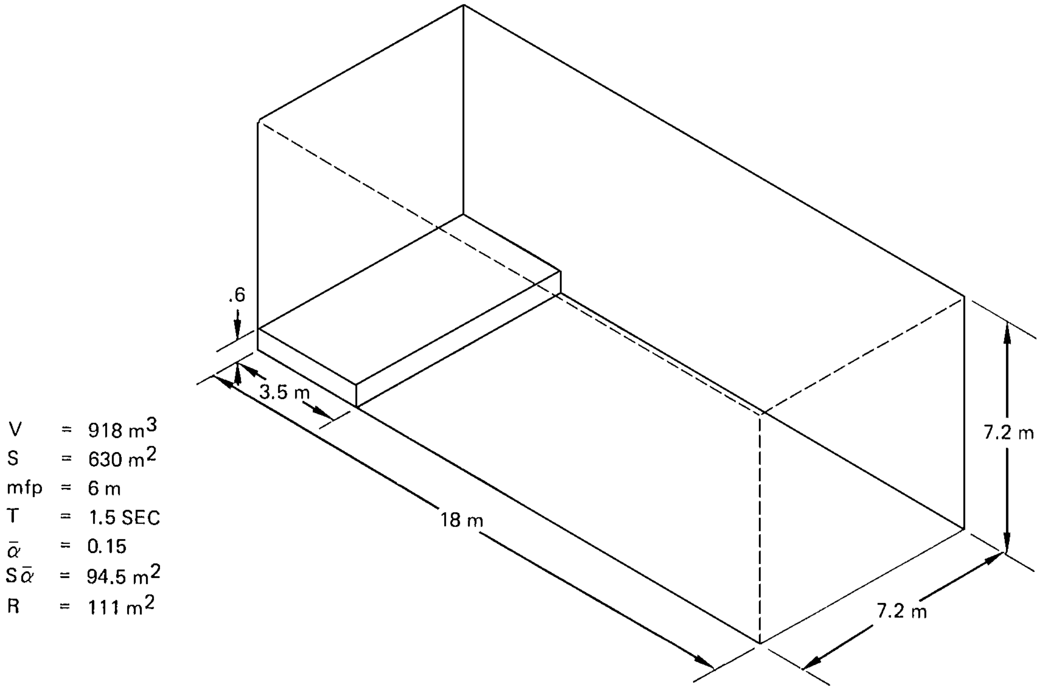

Figure 6-4. A sound system in a medium-size room

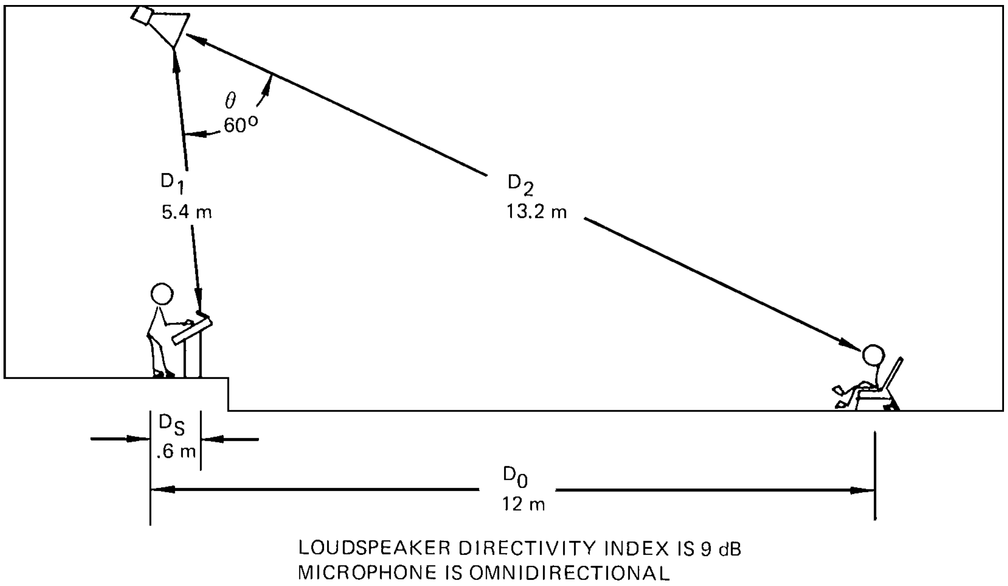

Figure 6-5. Sound system in a medium-size room, gain calculations

In the frequency range of interest, the loudspeaker is assumed to have a directivity index along its primary axis of 9 dB. From Figure 6-6 we find the corresponding critical distance of 4.2 meters. The loudspeaker's directivity index at a vertical angle of 60° is assumed to be -3 dB, with a corresponding critical distance of 1 meter. The unaided talker has a directivity index of 3 dB and his critical distance must therefore be 2 meters.

Our next step in calculating system gain is to find the difference in level produced by an unaided talker at the listener position as contrasted with that at the microphone position. In this example the listener is 12 meters from the talker and the microphone again is .6 meters away.

The talker's critical distance of 2 meters is more than 3 times the microphone distance. Therefore, the microphone is well in the direct field of the talker. The listener is more than 3 times the critical distance and is well into the reverberant field of the unaided talker. Setting the level produced by the unaided talker at 70 dB for a distance of .6 meters, we calculate that the direct field at D_C must be 60 dB, and since the reverberant field must also equal 60 dB, the level produced by the unaided talker at the listener's position is 60 dB.

The third step is to make similar calculations for the loudspeaker alone. The listener is located on the major axis of the loudspeaker and is more than 3 times the critical distance of 4.2 meters. The microphone is located at a vertical angle of 60 degrees from the loudspeaker's major axis, and also is more than 3 times the critical distance (at this angle) of 1 meter. Both the listener and the microphone are located in the reverberant field of the loudspeaker.

If the sound level produced by the loudspeaker at the microphone can be no greater than 70 dB (the same level as the talker) then the level produced by the loudspeaker at the listener's position must also be 70 dB, since both are in the reverberant field.

Having established these relationships we know that the talker produces a level at the listener's position of 60 dB with the sound system off and 70 dB with the sound system on, or a maximum potential gain of 10 dB. Allowing 6 dB headroom in a properly equalized system, we still realize 4 dB gain at the listener's position, and the sound system can be said to provide a small but perceptible increase in sound level.

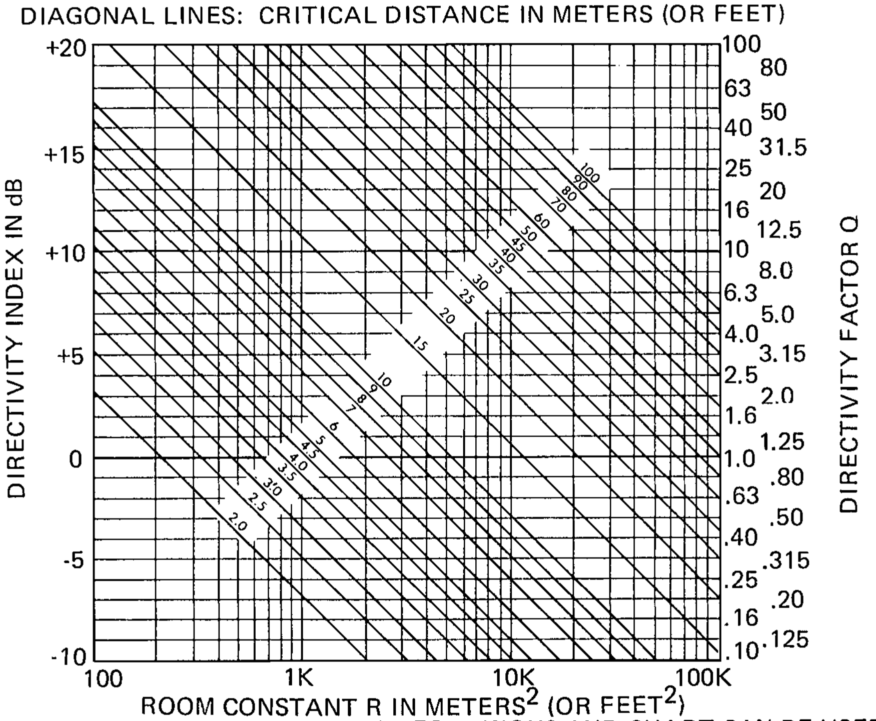

EQUATIONS:

CRITICAL DISTANCE = $0.14\sqrt{QR}$

DIRECTIVITY INDEX IN dB = 10 log Q

NOTE: EQUATIONS AND CHART CAN BE USED WITH ENGLISH OR METRIC UNITS. TO CONVERT CHART SCALES TO MORE CONVENIENT VALUES FOR METRIC CALCULATIONS, DIVIDE CRITICAL DISTANCES BY 10 AND ROOM CONSTANTS BY 100.

Figure 6-6. Critical distance as a function of room constant and directivity index or directivity factor

However, all of the preceding calculations have assumed that the microphone is an omnidirectional unit. What happens if we substitute a directional microphone? Figure 6-7 shows the additional geometrical relationships needed to calculate the increase in gain produced by a directional microphone.

Note that the distance from talker to microphone is still .6 meters and that the talker is assumed to be located along the major axis of the microphone. The loudspeaker is located 5.4 meters from the microphone along an angle of 75° from the major axis.

Figure 6-7 also shows a typical cardioid pattern for a directional microphone. The directivity index of such a microphone along its major axis is about 5 dB.

Since the talker is located on the major axis of the microphone, it "hears" his signal 5 dB louder than the random incidence reverberant field. In theory this should increase potential system gain by a factor of 5 dB.

But we must also consider the microphone's directional characteristics with relation to the loudspeaker. If the directivity index of the microphone at 0° is 5 dB, the polar pattern indicates that its directivity index at 75° must be about 3 dB. This tells us that even though the loudspeaker is 75° off the major axis of the microphone, it still provides 3 dB of discrimination *in favor* of the direct sound from the loudspeaker.

We know that the loudspeaker's directivity index is -3 dB along the axis between the loudspeaker and the microphone. We also know that the microphone's directivity index along this axis is +3 dB. The combined directivity indices along this axis must therefore, be 0 dB and we can find the equivalent critical distance from Figure 6-6.

The combined critical distance of loudspeaker and microphone along their common axis is about 1.3 meters. Since the distance between the two is more than 3 times this figure, the microphone still lies within the reverberant field of the loudspeaker. Using the directional microphone should therefore allow an increase in potential system gain before feedback of about 5 dB. (In practice, little more than 3 or 4 dB of additional gain can be achieved.)

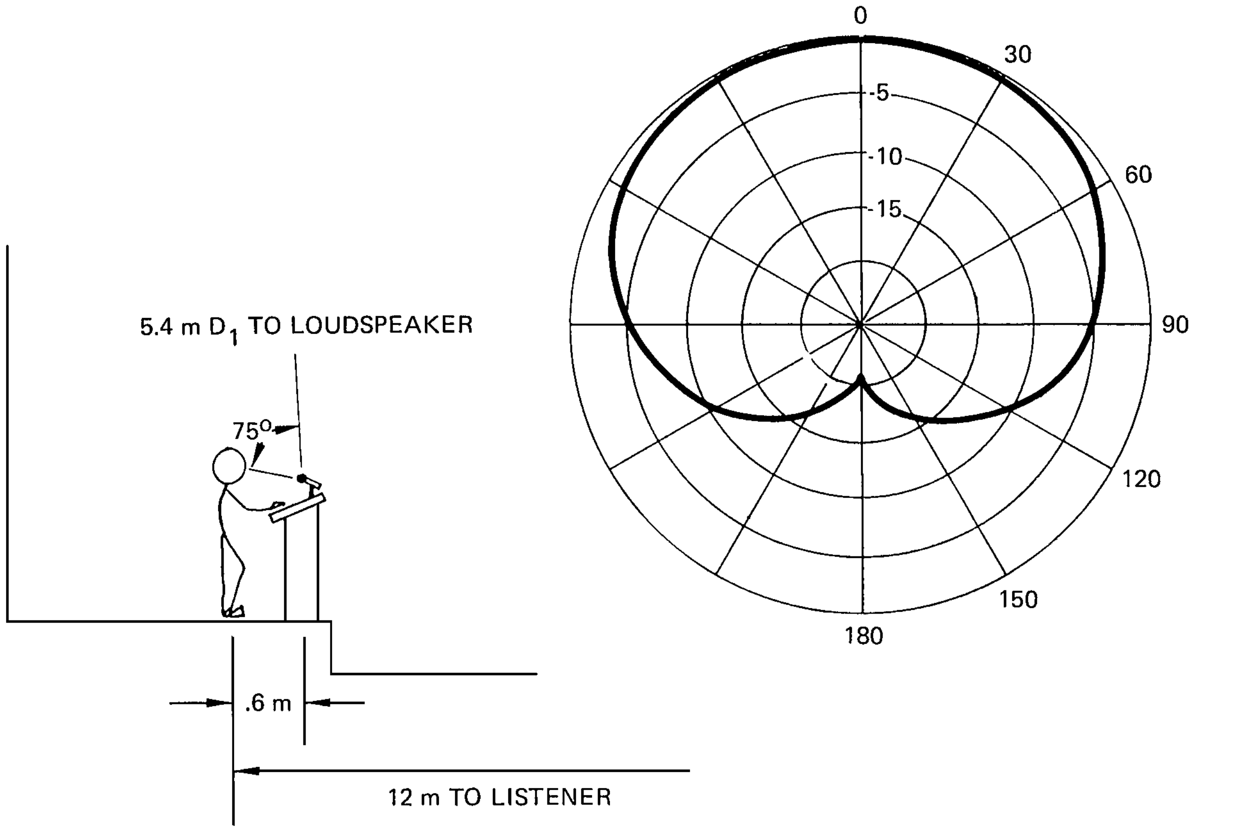

ASSUME A DIRECTIONAL MICROPHONE IS USED; ITS POLAR RESPONSE AT 1 kHz IS SHOWN ABOVE.

Figure 6-7. Characteristics of a cardioid microphone

Calculations for a Distributed Loudspeaker System

Figure 6-8 shows a moderate-size meeting room or lecture room. Its volume is 485 m^3, surface area is about 440 m^2, and $\bar{a}$ is 0.2 when the room is empty. For an unaided talker in the empty room, R is 110 m^2. However, when the room is fully occupied, $\bar{a}$ increases to 0.4 and the corresponding room constant is 293 m^2. We calculate the critical distance for the unaided talker (directivity index of 3 dB) to be 2 meters in an empty room and 3.4 meters when the room is full.

The room is provided with a sound system diagrammed in Figure 6-9. Forty loudspeakers are mounted in the ceiling on 1.5 meter centers to give smooth pattern overlap up into the 4 kHz region. Coverage at ear level varies only 2 or 3 dB through the entire floor area.

The usual definitions of critical distance and direct-to-reverberant ratio are ambiguous for this kind of loudspeaker array. Here, however, we are interested only in potential acoustic gain, and the ambiguities can be ignored. We already have stated that the loudspeaker array lays down a uniform blanket of sound across the room. The relative directional and temporal components of the sound field do not enter into gain calculations.

An omnidirectional microphone is located .6 meters from the talker, less than 1/3 D_C. No matter how many people are present, the microphone is in the direct field of the talker.

The farthest listener is 9 meters from the talker, more than three times D_C when the room is empty, and just about three times D_C when the room is full.

If the unaided talker produces 70 dB sound level at the microphone with the system off, and if the amplified sound level can be no greater than 70 dB at the microphone with the system on, then the maximum level is 70 dB everywhere in the room.

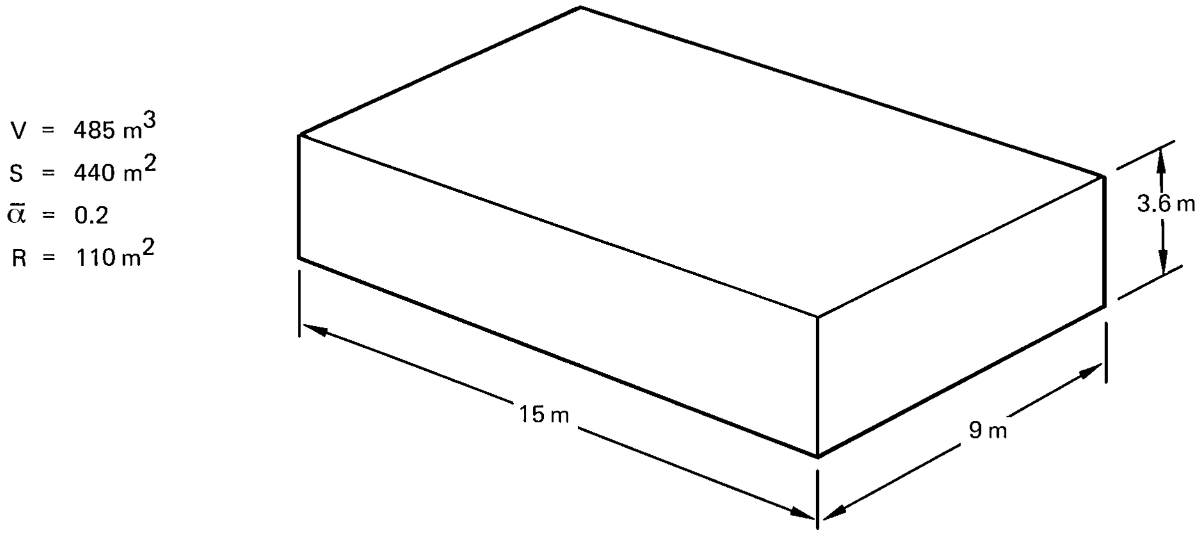

Figure 6-8. A moderate-size lecture room

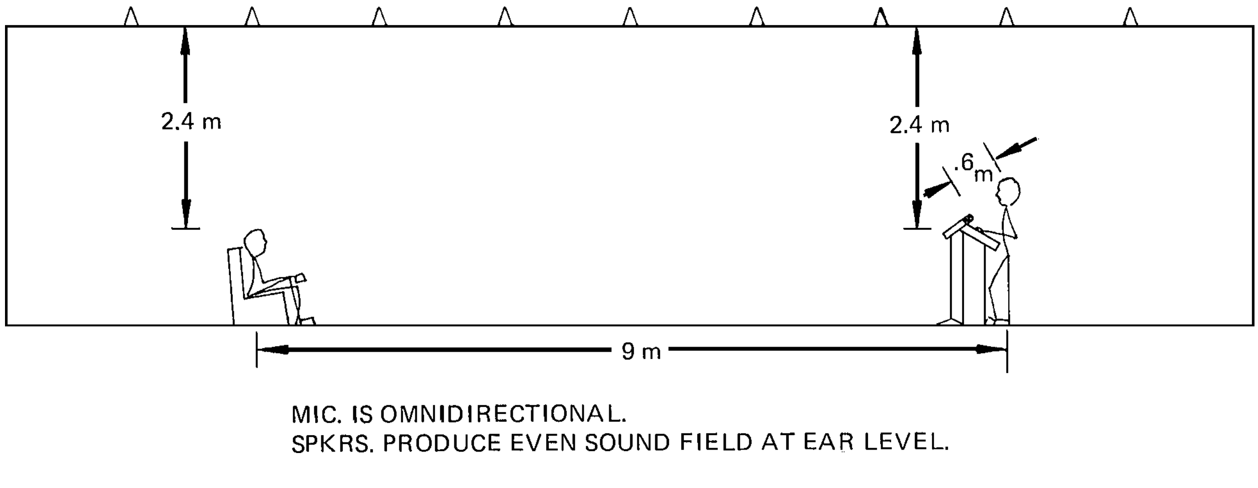

Figure 6-9. Sound system in a medium-size lecture room

From our calculations of critical distances, we see that the unaided talker will produce a sound level at the listener of 59 dB in an empty room and about 55 dB with a full audience. For a usable working delta of -6 dB, the calculated acoustic gain at the listener's position is about 5 dB in an empty room and about 9 dB when full.

Can we get more gain by turning off the loudspeaker directly over the microphone? Not in a densely packed array such as this. The loudspeakers are mounted close together to produce a uniform sound field at ear level. As a result, the contribution of any one loudspeaker is relatively small. However, by turning off *all* the loudspeakers in the performing area and covering only the audience, some increase in system gain may be realized.

In the example just given, each loudspeaker is assumed to have a directivity index in the speech frequency region of +6 dB at 0°, +3 dB at 45°, and 0 dB at 60°. Suppose we use only the 25 loudspeakers over the audience and turn off the 15 loudspeakers in the front of the room. In theory, the increase in potential gain is only 1 dB with a single listener or 2 dB when the audience area is filled. Even if we allow for the probability that most of the direct sound will be absorbed by the audience, it is unlikely that the gain increase will be more than 3 dB.

The calculations required to arrive at these conclusions are tedious but not difficult. The relative direct sound contribution from each of the loudspeakers at microphone and listener locations is calculated from knowledge of polar patterns and distances. By setting an arbitrary acoustic output per loudspeaker, it is then possible to estimate the sound level produced throughout the room by generally reflected sound (reverberant field) and that produced by reflected plus quasi-direct sound.

System Gain vs. Frequency Response

In the preceding examples we have not defined the frequency range in which gain calculations are to be made. In most sound systems the main reason for worrying about system gain is to make sure that the voice of a person talking can be amplified sufficiently to reach a comfortable listening level in all parts of the seating area. Therefore, the most important frequency band for calculating gain is that which contributes primarily to speech intelligibility: the region between 500 and 4000 Hz.

Below 500 Hz the response of the system can be gradually shelved, or attenuated, without seriously degrading the quality of speech. Above 4 kHz sound systems tend to take care of themselves, due to the increase in overall acoustical sound absorption. At very high frequencies, most environments are substantially absorptive, the air itself contributes considerable acoustical absorption and loudspeaker systems tend to become directional. These factors make it highly unusual to encounter feedback frequencies much above 2500 Hz.

To make sure that a sound reinforcement system will successfully amplify speech, it is a good idea to make gain calculations in at least two frequency bands. In a well-designed system, if calculations are made for the regions centered at 1 kHz and 4 kHz, chances are that no unforeseen problems in achieving desired system gain will be encountered.

However, the region below 500 Hz cannot simply be ignored. The room constant and the directivities of the loudspeaker system and the microphone should be checked in the 200 - 500 Hz range to make sure that there are not substantial deviations from the calculations made at 1 and 4 kHz. If the room has very little absorption below 1 kHz, and if the loudspeaker system becomes nondirectional in this region, it may be impossible to achieve satisfactory system gain without severely attenuating the mid-bass region. The result is the all too familiar system which provides satisfactory speech intelligibility, but which sounds like an amplified telephone.

The Indoor Gain Equation

From the foregoing discussions, we can appreciate the complexity of indoor system gain analysis and the need for accurately calculating the attenuation of sound along a given path, from either talker or loudspeaker, noting when we leave the direct field and make the transition into the reverberant field. If we were to attempt to establish a general system gain equation, we would have a very difficult task. However, in the special case where the microphone is in the talker's direct field, and both microphone and listener are in the loudspeaker's reverberant field, then the system gain equation simplifies considerably.

Let us consider such an indoor system, first with the system turned off, as shown in Figure 6-10. If the talker produces a level L at the microphone, then the level produced at the listener will be:

Level at listener = $L - 20 \log (D_{ct}/D_s)$, where D_{ct} is the critical distance of the talker. The assumption made here is that the level at the listener is entirely made up of the talker's reverberant field and that that level will be equal to the inverse square component at D_{ct}.

Now, the system is turned on, and the gain is advanced until the loudspeaker produces a level *L* at the microphone. At the same time, the loudspeaker will produce the same level *L* at the listener, since both microphone and listener are in the loudspeaker's reverberant field.

Subtracting the levels at the listener between the system on and the system off, we have:

$$\text{Difference} = L - [L - 20 \log (D_{ct}/D_s)]$$

or:

$$\text{Gain} = 20 \log D_{ct} - \log D_s$$

Finally, adding a 6 dB safety factor:

$$\text{Gain} = 20 \log D_{ct} - 20 \log D_s - 6$$

Note that there is only one variable, D_s, in this equation; D_{ct} is more or less fixed by the directivity of the talker and the acoustical properties of the room.

Of course there are many systems in which the microphone may be placed in the transition zone between the talker's direct and reverberant fields, or where the listener is located in the transition region between the loudspeaker's direct and reverberant fields. In these more complicated cases, the foregoing equation does not apply, and the designer must analyze the system, both on and off, pretty much as we went stepwise through the three examples at the start of this chapter.

Measuring Sound System Gain

Measuring the gain of a sound system in the field is usually done over a single band of frequencies. It is normally specified that system gain shall be measured over the octave-wide band centered at 1 kHz. Another common technique is to use pink noise which is then measured with the A-weighted scale. A typical specification for sound system gain might read as follows:

"The lectern microphone shall be used in its normal position. A small loudspeaker shall be mounted on a stand to simulate a person talking approximately .6 meters from the microphone. The response of this test loudspeaker shall be reasonably flat over the range from 250 - 4000 Hz.

"With the system turned off, the test loudspeaker shall be driven with a pink noise signal to produce a sound level of about 80 dB(A) at the system microphone. This level shall be measured with a precision sound level meter, using the "A" scale, with its microphone immediately adjacent to the sound system microphone.

"After noting the sound level at the system microphone with the sound system turned off, the sound system shall be turned on and its gain advanced to a point just below sustained oscillation. The amplified sound level shall be measured with the same sound level meter in the central part of the auditorium.

"The D of the sound system shall be calculated by subtracting the measured SPL at the microphone (system off) from the measured SPL in the auditorium (system on)."

The gain of the system is of course measured at some point in the auditorium and is the level difference at that point produced by the test loudspeaker before and after the system has been turned on. Details of the measurements are shown in Figure 6-11.

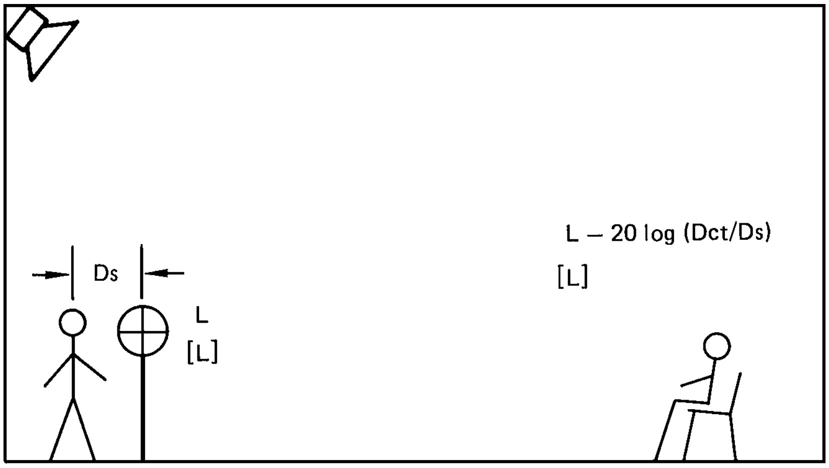

BRACKETS INDICATE LEVELS WITH SYSTEM ON.

Figure 6-10. Conditions for the indoor system gain equation

General Requirements for Speech Intelligibility

The requirements for speech intelligibility are basically the same for unamplified as for amplified speech. The most important factors are:

1. Speech level versus ambient noise level. Every effort should be made to minimize noise due to air handling systems and outside interferences. In general, the noise level should be 25 dB or greater below the lowest speech levels which are expected. However, for quite high levels of reinforced speech, as may be encountered outdoors, a noise level 10 to 15 dB below speech levels may be tolerated.

2. Reverberation time. Speech syllables occur three or four times per second. For reverberation times of 1.5 seconds or less, the effect of reverberant overhang on the clarity of speech will be minimal.

3. Direct-to-reverberant ratio. For reverberation times in excess of 1.5 seconds, the clarity of speech is a function of both reverberation time and the ratio of direct-to-reverberant sound.

In an important paper (8), Peutz set forth a method of estimating speech intelligibility which has found considerable application in sound system design. The Peutz findings were compiled on the basis of data gathered over a period of years. The data and the method used to arrive at the published conclusion are clearly set forth in the paper itself. The conclusions can be summarized as follows:

1. In practice, the articulation loss of consonants can be used as a single indicator of intelligibility. Although the original research of Peutz was in Dutch speech, the findings seem to be equally applicable to English.

2. As would be expected, the researchers found wide variations in both talkers and listeners. However, a 15% articulation loss of consonants seems to be the maximum allowable for acceptable speech intelligibility. In other words, if articulation loss of consonants exceeds 15% for the majority of listeners, most of those people will find the intelligibility of speech to be unacceptable.

3. Articulation loss of consonants can be estimated for typical rooms. Articulation loss of consonants is a function of reverberation time and the direct-to-reverberant sound ratio.

4. As a listener moves farther from a talker (decreasing the direct-to-reverberant sound ratio) articulation loss of consonants increases. That is, intelligibility becomes less as the direct-to-reverberant ratio decreases. However, this relationship is maintained only to a certain distance, beyond which no further change takes place. The boundary corresponds to a direct-to-reverberant ratio of -10 dB.

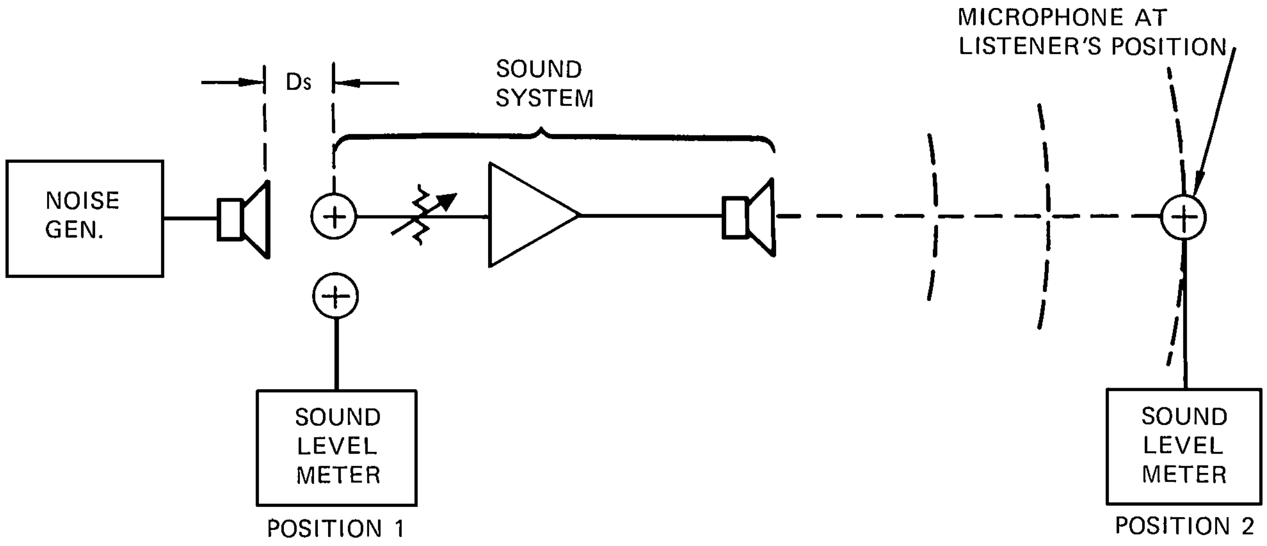

SYSTEM GAIN = LEVEL, POSITION 2, SYSTEM ON – LEVEL, POSITION 2, SYSTEM OFF

SYSTEM Δ = LEVEL, POSITION 2, SYSTEM ON – LEVEL, POSITION 1, SYSTEM OFF

Figure 6-11. Measurement of sound system gain and delta (D)

The last point is illustrated graphically in Figure 6-12, adapted from the Peutz paper. Each of the diagonal lines corresponds to a particular reverberation time. Each shelves at a point corresponding to a direct-to-reverberant sound ratio of -10 dB. Note that the shelf may lie above or below the 15% figure depending upon the reverberation time of the room. This agrees with other published information on intelligibility. For example, Rettinger points out that in rooms having a reverberation time of 1.25 seconds or less, direct sound and early reflections always make up the greater portion of the total sound field. Intelligibility in such rooms is good regardless of the direct-to-reverberant sound ratio at any given listening position. Conversely, anyone who has worked in extremely large reverberant spaces such as swimming pools or gymnasiums knows that intelligibility deteriorates rapidly at any point much beyond the critical distance. According to the chart, a 15% articulation loss of consonants in a room having a reverberation time of 5 seconds corresponds to a direct-to-reverberant sound ratio of only - 5.5 dB.

Problems associated with speech intelligibility in enclosed spaces have received a great deal of attention prior to the publication of the Peutz paper. The virtue of Peutz' method for estimating speech intelligibility is its simplicity. It must be remembered, however, that a number of contributing factors are ignored in this one simple calculation. The chart assumes that satisfactory loudness can be achieved and that there is no problem with interference from ambient noise. It also postulates a single source of sound and a well behaved, diffuse reverberant sound field.

The data from the Peutz paper have been recharted in a form more convenient for the sound contractor in Figure 6-13. Here we have arbitrarily labeled the estimated intelligibility of a talker or a sound system as "satisfactory", "good", or "excellent", depending upon the calculated articulation loss of consonants.

There often is a dramatic difference in the acoustical properties of a room depending upon the size of the audience. Calculations should be made on the basis of the "worst case" condition. In some highly reverberant churches particularly, it may turn out that there is no practical way to achieve good intelligibility through the entire seating area when the church is almost empty. The solution may involve acoustical treatment to lessen the difference between a full and an empty church, or it may involve a fairly sophisticated sound system design in which reinforced sound is delivered only to the forward pews when the congregation is small (presuming that a small congregation can be coaxed into the forward pews).

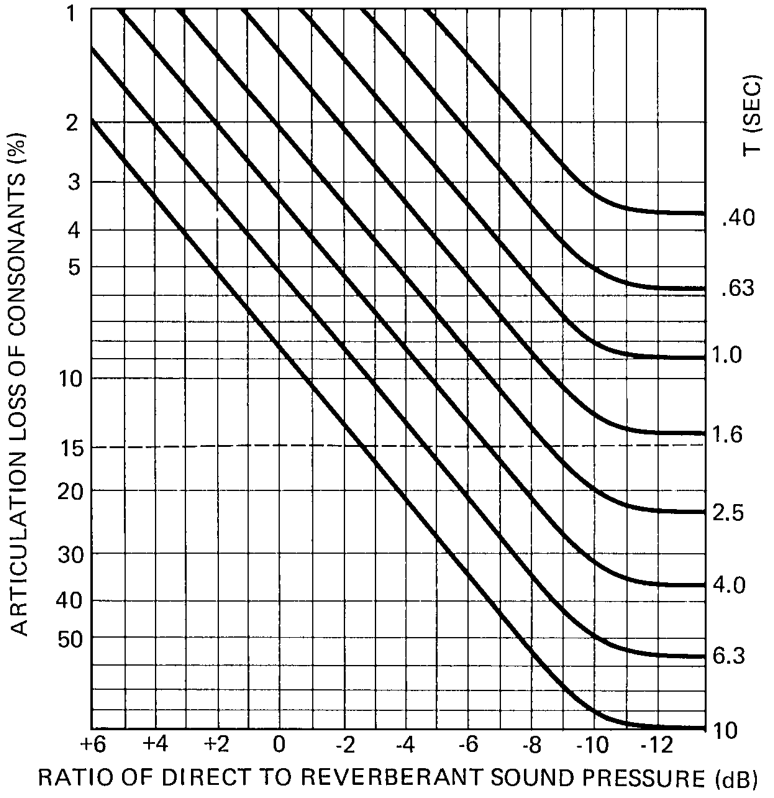

Figure 6-12. Probable articulation loss of consonants vs. reverberation time & direct-to-reverberant sound ratio

Also, local acoustical conditions may exist which are not taken into account by statistical theory and, therefore, not covered by the Peutz findings or any of the other equations we have studied. Such localized dead spots or zones of interference may not be discovered until the sound system is installed. In large reverberant spaces, sufficient flexibility should always be built into the sound system design to allow for such surprises.

The effect of masking by unwanted background noise has been touched on only briefly in this section. Such unwanted noise may be produced by sound from the outside environment, by noisy air handling equipment, by noisy backstage mechanical equipment or by the audience itself. For good listening conditions, the level of ambient noise as measured on the "A" scale should be at least 10 dB below the desired signal. Since the optimum level for reproduced speech in the absence of strong background noise is 65 - 70 dB(A) this means that background noise with a full audience should not exceed 55 dB(A). In auditoriums and concert halls, acoustical designers normally attempt to reduce background noise in an empty house to a level not exceeding 25 dB(A). In a church or meeting hall, the maximum tolerable background noise for an empty room is about 40 dB(A).

A sound reinforcement system cannot be turned up indefinitely. In many situations it is difficult enough to achieve a useful operating level of 60 - 65 dB(A) without feedback. It is easy to see, therefore, that the presence of excessive background noise can render an otherwise good sound reinforcement system unsatisfactory.

As an example of how the Peutz analysis can dictate the type of sound system to be used, let us consider a reinforcement system to be used in a large reverberant church. Details are shown in Figure 6-14.

Let us assume that the reverberation time is 4 seconds at mid-frequencies and that the designer's first choice is a single-point loudspeaker array to be placed high above the chancel. Coverage requirements pretty much dictate the directional characteristics of the array, and let us assume that the array will consist of two JBL Bi-Radial horns: 20° by 40° for far coverage, and 90° by 40° for near coverage. What we wish to calculate is the direct-to-reverberant ratio at selected points in the audience area to determine if the Peutz criteria for acceptable intelligibility can be met. The most direct way of doing this is to calculate the total reverberant level in the room for a given power input to each horn and compare it with the direct sound coverage provided by each horn over its coverage angle.

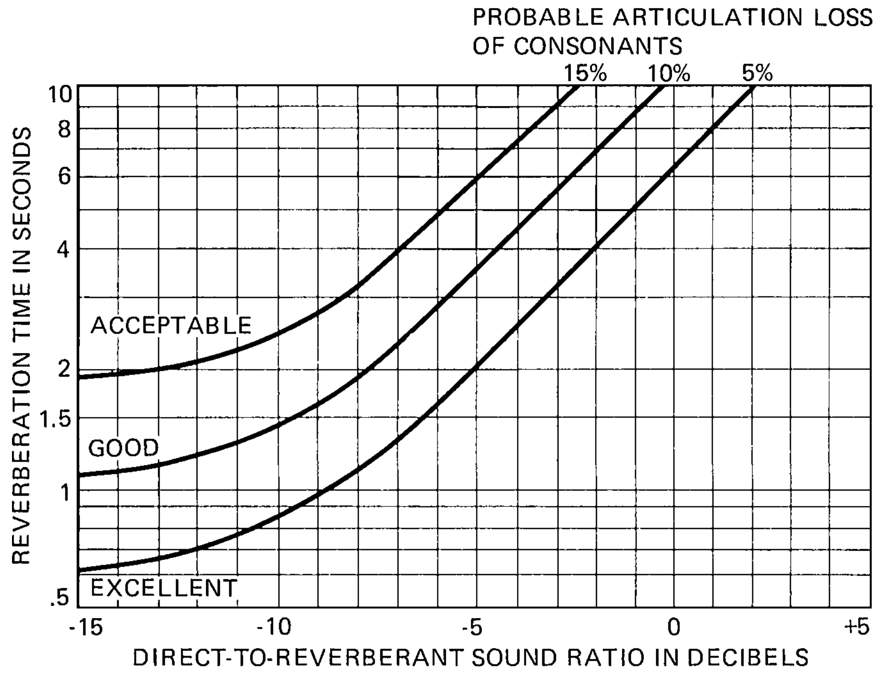

Chart developed from data published by V.M.A. Peutz in Journal of the AES, Vol. 19, December, 1971

Figure 6-13. Probable intelligibility as a function of reverberation time and direct-to-reverberant sound ratio

The analysis shown in Figure 6-14 indicates that when each of the two horns is powered by one watt, the reverberant field in the room (read directly from Figure 5-21) is 94 dB-SPL. The direct field level provided by each horn over its coverage angle is about 85 dB-SPL. This produces a direct-to-reverberant ratio of -9 dB, and an inspection of Figure 6-13 tells us that the system will have marginal intelligibility. Note that for 4 seconds of reverberation time, the direct-to-reverberant ratio should be no less than about -7 dB if acceptable intelligibility is to be expected. This simple analysis has told us that, on paper, we have designed a sound system which will likely fail to satisfy the customer.

Had the system consisted of a single horn, knowledge of its on-axis DI and Q could have led quickly to a determination of critical distance, and the direct-to-reverberant ratio could have been scaled from D_C. However, for the composite array analyzed here, there is no single value of DI or Q which can be used, and a direct calculation of the overall reverberant level, using what we know about the efficiency of the transducers, and making a comparison with the direct field, based on the sensitivities of the transducers, is the quickest way to solve the problem.

But the question remains: What kind of system will work in this large resonant room? Clearly, a distributed system is called for. In such a system, a number of lower-powered loudspeakers are placed on columns on each side of the church, each loudspeaker covering a distance of perhaps no more than 5 or 6 meters. In this way, the direct-to-reverberant ratio can be kept high. If such a system is further zoned into appropriate time delays, the effect will be quite natural, with subjective source localization remaining toward the front of the listening space. Details of this are shown in Figure 6-15.

Again, we calculate the total reverberant level and compare it with the longest throw each loudspeaker will be called upon to handle. There are 14 loudspeakers, 7 on each side. Let us assume that the efficiency of these loudspeakers is 1.2% and that their sensitivity is 95 dB, 1 watt at 1 meter. Feeding one watt into each loudspeaker results in a total acoustical power of 14 x .012, or 0.17 watt. Again using Figure 5-21, we observe that the reverberant level will be 92 dB-SPL. The longest throw each loudspeaker has to cover is, say, 4 meters. Since the 1-watt, 1-meter sensitivity is 95 dB, the direct field for each loudspeaker will be 12 dB lower, or 83 dB.

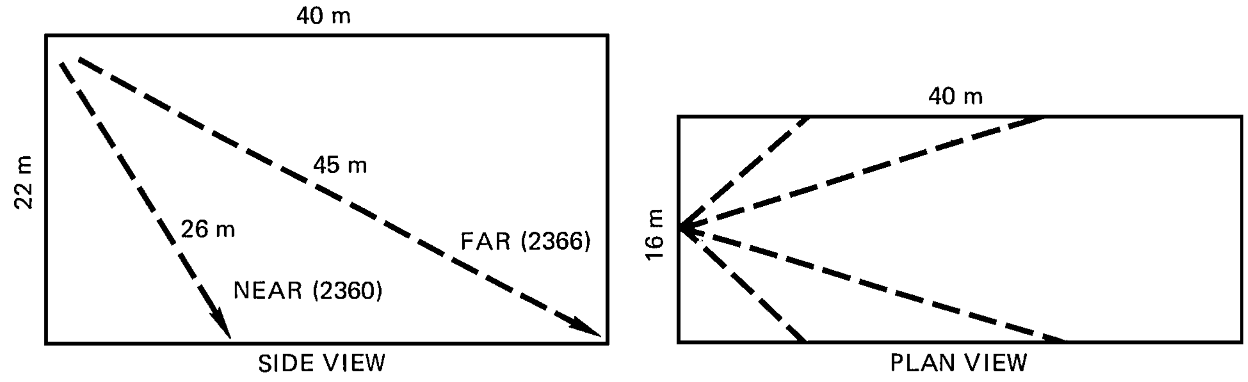

$V = 14{,}000\ m^3$
$S = 3{,}740\ m^2$
$RT = 4$ sec
$\bar{a} = .14$
$R = 610\ m^2$
HF eff (%) = 20%

$$\text{REVERBERANT SPL} = 10 \log\left(\frac{2 \text{ watts} \times .2}{610}\right) + 126$$
$$= \underline{94 \text{ dB - SPL}}$$

DIRECT FIELD DATA:

1. 2366 at 45 m: 1 watt produces 85 dB-SPL
2. 2360 at 26 m: 1 watt produces 85 dB - SPL

∴ Direct-to-reverberant ratio = 85-94 = 9 dB

Figure 6-14. Analysis of intelligibility criteria

Thus, the direct-to-reverberant ratio will be 83-92, or -9 dB. This is still not good enough, but we must remember that more than half the listeners will be closer to a loudspeaker than 4 meters. Another very important point we have not yet considered is the fact that the distributed loudspeakers are aimed almost totally into the audience, with its absorption coefficient considerably greater than $\bar{a}$ of .12. This is the appropriate time to use R' instead of R in our calculations.

Calculating R' based upon an a' of .95 for the audience area in the 1 kHz band:

$$R' = S\bar{a}/(1 - a') = 375/.05 = 7500 \text{ m}^2.$$

Recalculating the reverberant level from Figure 5-21, we get 80 dB-SPL. The new direct-to-reverberant ratio is 83 - 80, or +3 dB, and the system will be quite workable.

Will the reverberant level really be only 80 dB? In actuality, we might observe something a little higher than 80 dB, but not enough to alter our analysis significantly.

We can also ask the question of whether our analysis using R' would have materially affected the performance of the central array system. A rigorous analysis would be a little tedious, but we can make a simplifying assumption. Let us assume that half of the direct sound from the central array was incident on the audience with its .95 absorption coefficient. Let us round this off and call it 1.0 instead, resulting in no sound at all being reflected from the audience. This would only lower the reverberant level in the room by 3 dB, hardly enough to make the direct-to-reverberant ratio workable.

More than any other we have carried out in this chapter, this analysis points up the multi-dimensional complexity of sound system design. Again, we state that there are no easy solutions or simple equations. Instead, there is only informed rational analysis and thoughtful balancing of many factors.

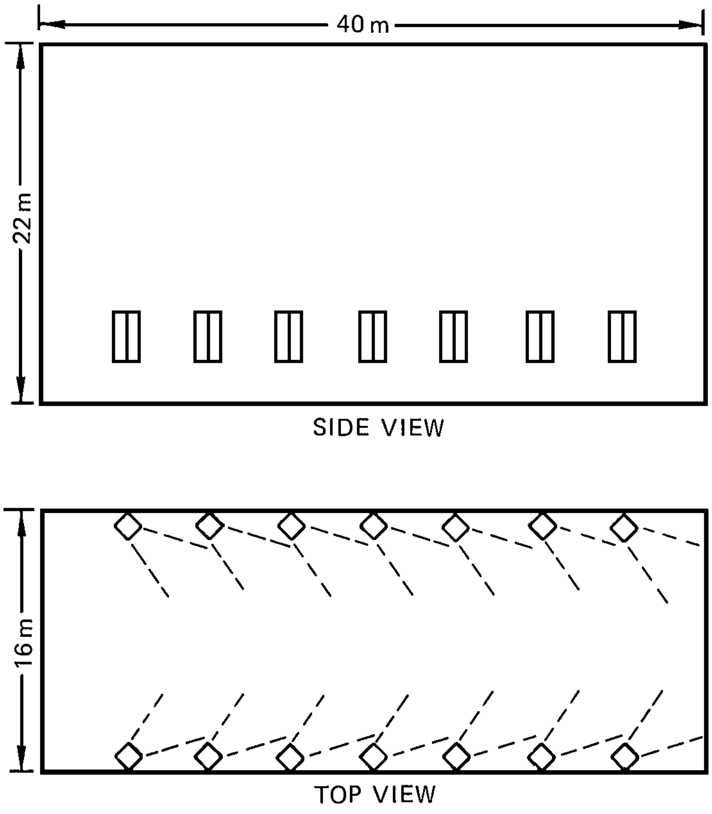

Figure 6-15. A distributed system in a large church

The Role of Time Delay in Sound Reinforcement

The preceding example mentioned time delay as a means of preserving naturalness in a distributed system. This comes about by way of the Haas (or precedence) effect (5), which is illustrated in Figure 6-16. If two loudspeakers are fed the same signal, a listener mid-way between them will localize the source of sound directly ahead (A). At *B*, we have introduced a delay in one of the otherwise identical channels, and the listener will clearly localize toward the *earlier* loudspeaker. At *C*. the leading signal has been reduced in level, resulting in an effect of equal loudness at both loudspeakers. This has the approximate effect of restoring the apparent localization to the center. While this tradeoff is not an exact one, the values shown in the graph at *D* indicate the approximate trading value between level and delay for equal loudness at both loudspeakers.

Figure 6-16E shows how delay is typically implemented in sound reinforcement. Here, that portion of the audience seated under the balcony does not get adequate coverage from the central array. Small loudspeakers placed in the balcony soffit can provide proper coverage only if they are delayed so that the sound arrives at the listeners in step with that from the central array. In this way, the listener tends to localize the source of sound at the central array — not at the soffit loudspeakers. If the soffit loudspeakers are not delayed, listeners under the balcony would localize sound directly overhead, and those listeners just in front of the balcony would be disturbed by the undelayed sound. In practice, the delay is usually set for an additional 20 msec in order to minimize comb filtering in the overlap zone between direct and delayed sound fields.

The ready availability of solid state digital delay units has made time delay an indispensable element in sound system design.

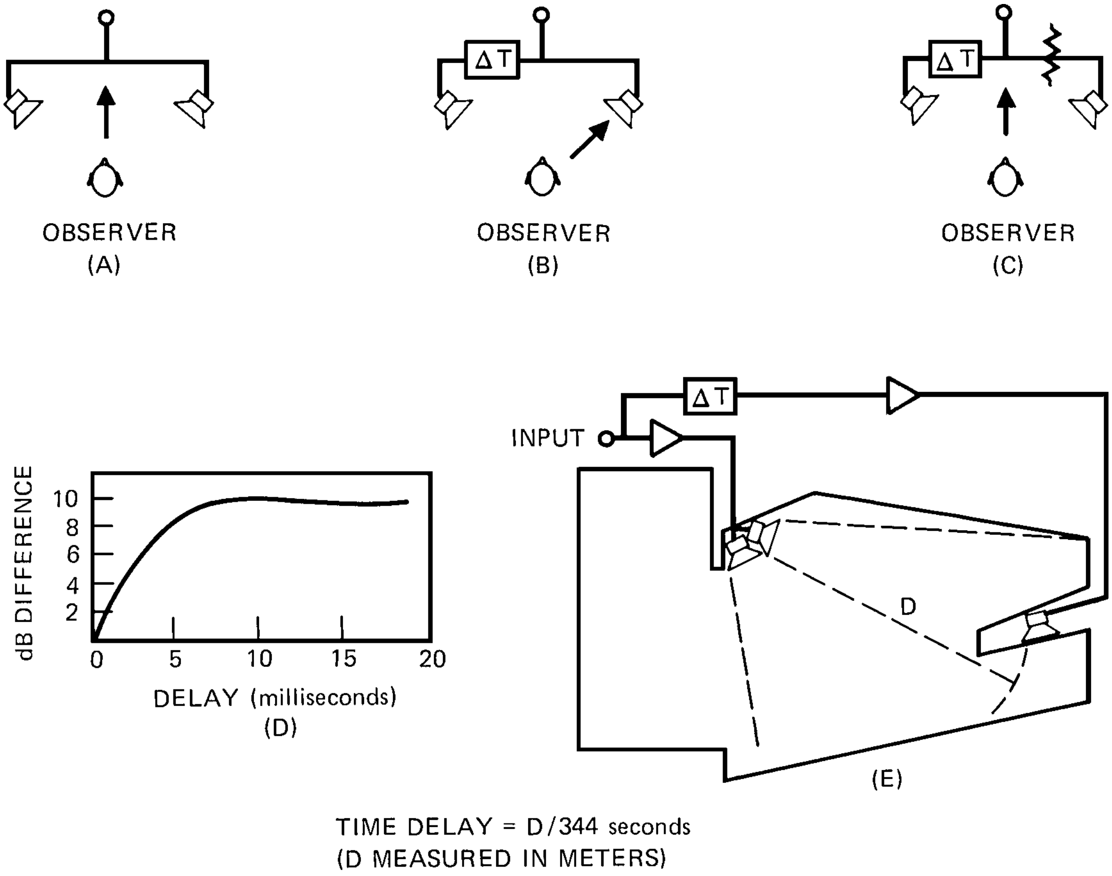

Fugure 6-16. The Haas, or precedence, effect

System Equalization and Power Response of Loudspeakers

It is customary to equalize all professional sound reinforcement systems for two reasons: overall response shaping and control of feedback. The overall response may be made smoother for a more natural effect through the use of broadband equalization and through the proper choice of drive components themselves. Where high system gain is required, narrow-band notch filters may successfully remove the tendency of the system to "ring" at certain frequencies. We will examine the requirements of broad-band equalization first.

A sound system is equalized by feeding pink noise (equal power per octave) into the system and adjusting the system's response to fit a preferred contour at some point in the middle of the house. This procedure is shown in Figure 6-17A. The response contour most often used today is shown at *B*.

At the point in the house where the measurement is made, the reverberant field predominates, and what we are shaping with the equalizer is actually the power response of the loudspeaker as influenced by boundary absorption in the room. If the loudspeaker's power response is smooth to begin with, then all is well. However, if, as in some older designs, the system's power response is irregular, then equalization will usually make things worse, as shown in Figure 6-18.

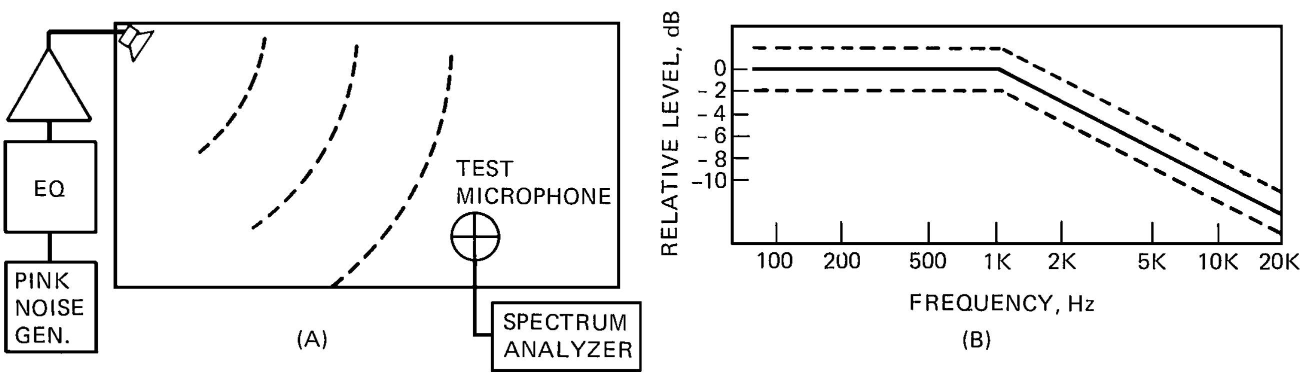

Figure 6-17. Sound system equalization procedure

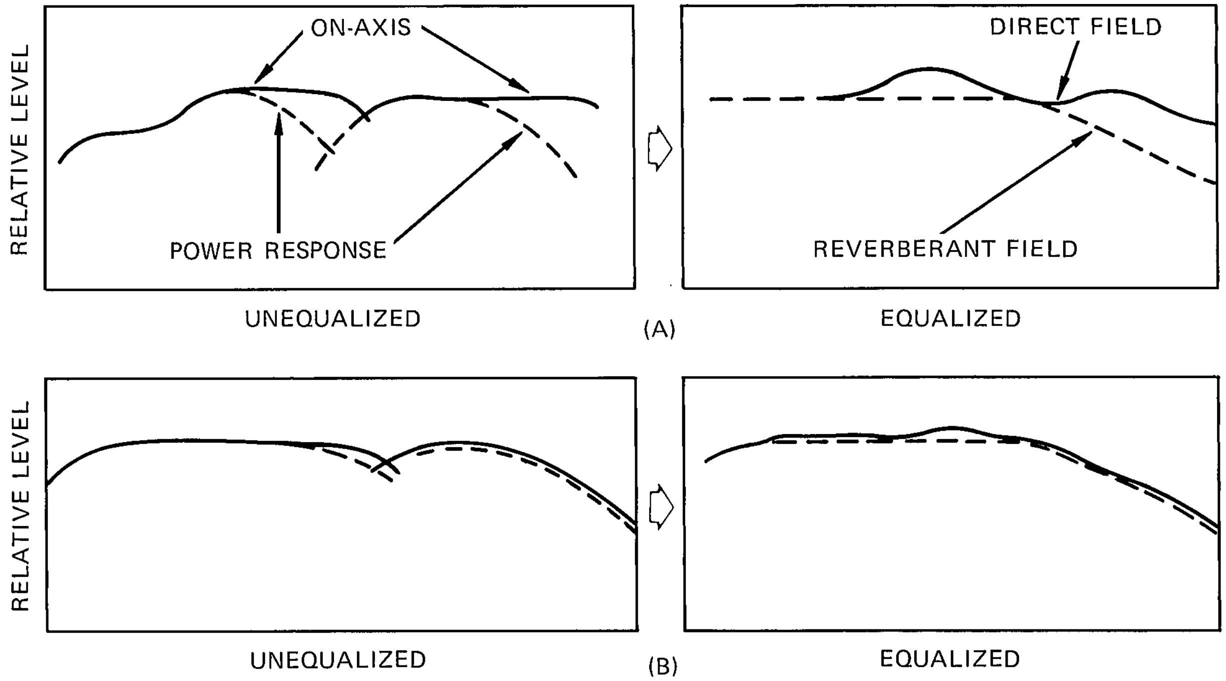

Figure 6-18. System equalization

At *A*, we see the on-axis (solid curve) and power (dotted curve) response of a 2-way system making use of a ported LF horn unit and an older type HF radial horn. When such a system is equalized for smooth power response, as in the case of the standard mid-house equalization procedure, then the on-axis, or direct field response of the system will have a couple of “bumps” in its response. This will have the effect of making both speech and music sound unnatural.

Now let us examine the case at *B*. Here, the LF part of the system consists of a single 380 mm (15”) LF driver in a ported enclosure, and the HF horn is a JBL 2360 Bi-Radial. Note that the power response and on-axis response very nearly lie over each other. Thus, the adjustment of the system out in the house will result in both reverberant field response (power response) and direct field response (on-axis response) tracking each other closely. Such a system can often be broad-band-equalized merely through the proper choice of components, dividing network and transducer drive levels, requiring little, if any, added electronic equalization.

The graph shown in Figure 6-19 shows this clearly. Here, we have plotted the variation in R over the frequency range for a large auditorium. The room we have chosen has the following characteristics:

$$V = 13{,}500\ m^3$$

$$S = 3538\ m^2$$

$RT_{125\,Hz} = 1.5$ sec $R_{125\,Hz} = 1774\ m^2$

$RT_{1\,kHz} = 1.2$ sec $R_{1\,kHz} = 2358\ m^2$

$RT_{4\,kHz} = 0.8$ sec $R_{4\,kHz} = 3989\ m^2$

This spread between reverberation times at low, mid, and high frequencies is typical of a good auditorium. When we calculate the room constant as a function of frequency and plot it, along with the sound level that would be produced by one acoustic watt in the room, we see that the total variation in SPL is only about 3 dB. The importance of this observation is that, if we had a loudspeaker system exhibiting flat power response, then it would produce a reverberant SPL in this auditorium that would vary no more than the inverse of the curve shown in Figure 6-19. Obviously, the smoother the power response of a loudspeaker, the less equalization it will require and the more natural it will sound on all types of program.

Another use of equalization is in controlling feedback. As we have stated many times, a sound reinforcement system should be operated at least 6 dB below the point of feedback if it is to be stable. Through careful and selective use of narrow-band notch filters, the first several ring modes of a sound system can be minimized, and the overall system gain can be increased perhaps 3 or 4 dB. The practice of narrow-band equalization is complex, and it is best left to those who have been trained in it.

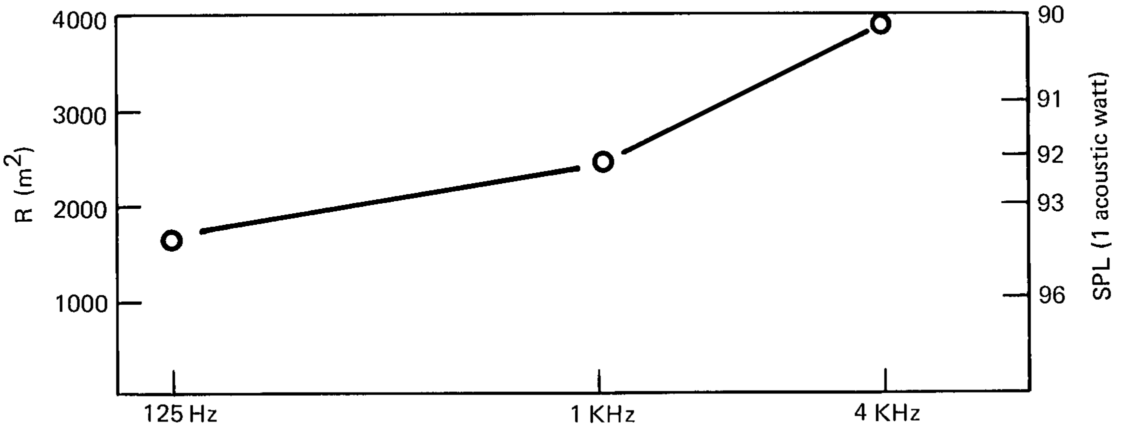

Figure 6-19. Variation in *R* and reverberant level with frequency

System Design Overview

There is a rational approach to indoor sound reinforcement system design, and it can be broken down into the following steps:

1. Lay out the coverage requirements, generally starting with a central array. Determine the drive requirements for each element in the array.

2. Calculate both direct field and reverberant field levels at various parts of the audience area, and then determine if their ratios, in combination with the reverberation time of the room, will result in adequate intelligibility. These calculations are most important in the 1 kHz range, but they should also be made in the 125 Hz and 4 kHz ranges as well. Determine the requirements for adequate gain, noting the value of D_S that will be required in normal operation.

3. If the intelligibility criteria are met, then the system can be completed. If the intelligibility criteria indicate an inadequate direct-to-reverberant ratio, consider the possibility of increasing R through the addition of acoustical absorption in the room. In existing rooms, this may not be possible; however, for rooms still in the design phase, it may be possible to increase the amount of absorption.

4. If a recalculation of the room parameters indicates that a central array will work, then the design can be completed. If not, the next step is to determine the nature of a distributed system that will satisfy the requirements of intelligibility. A central array can often be designed to cover just the front part of a room, with delayed loudspeakers covering the rear of the room. In marginal cases, this is likely to be more satisfactory than an all-out distributed system.

The entire process described above has been reduced to the flow chart shown in Figure 6-20.

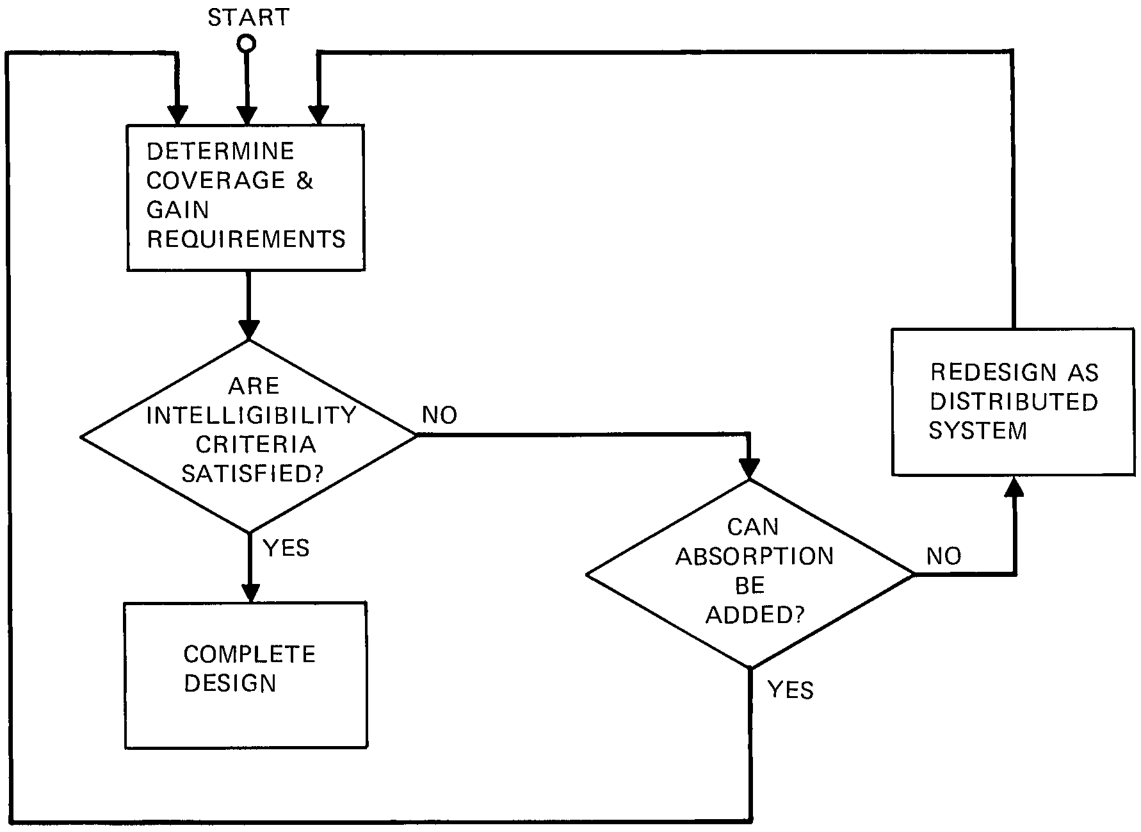

Figure 6-20. Flow diagram for system design

Chapter 7: System Architecture and Layout

Introduction

Just as the building architect interprets a set of requirements into flexible and efficient living or working spaces, the designer of a sound reinforcement system similarly interprets a set of requirements, laying out all aspects of the system in an orderly fashion. A full sound system specification will detail almost *everything*, including all equipment choices and alternatives, rack space requirements, wire gauges and markings, and nominal signal operating levels. In addition, the electroacoustical aspects of the system will have been worked out well ahead of time so that there will be few surprises when the system is turned on for the first time.

The consultant or design engineer lays out the broad system parameters, but it is the sound contractor who is responsible for all component layout and orderly completion of the system, along with documentation for usage as well as maintenance. System architecture also addresses signal flow and nominal operating levels, consistent with the requirements of the system. The best designs are usually the simplest and most straightforward ones.

In this chapter we will cover several design projects, beginning with basic design goals and fundamental performance specifications. We will then move on to system descriptions and layout, suggesting ways that the specification can be met. We will concentrate on the electroacoustical problems that are fundamental to each case study. By way of review, we will first discuss a few basic audio engineering subjects, beginning with an abbreviated signal flow diagram for a relatively simple speech reinforcement system.

Typical Signal Flow Diagram

Assume that we have the following requirements:

1. Up to ten microphones may be needed at different locations.

2. The system is to be used primarily for speech reinforcement.

3. The system shall be able to produce peak levels up to 85 dB-SPL in all parts of the house under all speech input conditions, including weak talkers. The room noise level is about 25 dB(A).

The most basic interpretation of these requirements tells us the following:

1. A small Soundcraft or Spirit console should suffice for all input configurations and routing control.

2. A single central array is the preferred system type, based on the desire for most natural speech reproduction. The array may be specified using individual HF and LF components; alternatively, an appropriate full-range system with integral rigging capability may be specified, as we will show here.

3. Both biamplification and system response equalization are recommended, and this suggests that a digital loudspeaker controller be used for frequency division, time alignment, and system response equalization.

Note that there are many points in the system where we can set or change gain. There is always considerable *gain overlap* in the electronic devices used in sound system work. The purpose of this is to allow for a great variety of input conditions as well as to allow the equipment to be configured in different ways, as required. It is critical that the designer specify a nominal setting of each gain control, locking off, when possible, those controls that will not — or should not — be altered during normal system use. This important setting of gain relationships should be based on the absolute requirement that the input noise floor of the system should not be degraded later in the chain, and that no early stage of amplification should overload before the output power amplifier overloads. In our exercise here, we

will simplify things by considering only a single microphone path through the system to a single loudspeaker.

For the moment, let us consider only the abbreviated console flow diagram shown in the upper part of Figure 7-1A. Microphone ratings in use today state the unloaded output voltage when the unit is placed in a sound field of 94 dB SPL. Normal speech level at an operating distance of .5 meter is about 72 dB SPL; If we are using a microphone with a sensitivity of 10 mV/Pa, the microphone's nominal voltage output in the 72 dB sound field will be:

$$E = 10^{22/20} \times 10 \text{ mV} = .8 \text{ mVrms}$$

Step One:

Set a reference input of .8 mVrms at 1000 Hz at one of the microphone inputs on the console. With the input and output faders at their nominal "zero" markings, set the microphone's input trim control for a console output of 0.4 Vrms. (Alternatively, a stable sound pressure level of 72 dB may be generated at the microphone, and the microphone trim setting adjusted for 0.4. Vrms output.) In making this setting, the trim potentiometer marker will normally be somewhere between 10 o'clock and 2 o'clock. This setting represents a nominal operating point for the microphone/console combination, and there is ample flexibility for operating the system above or below this setting, as may be required by weak or loud talkers. Frequency division and system equalization are to be carried out by a digital controller, the JBL model DSC260. The loudspeaker to be used is the JBL model SR4726A, and the recommended amplifier is the JBL model MPX600. Typical operating levels are as shown in the lower portion of Figure 7-1A.

The level diagram shown in Figure 7-1B shows that, at the power amplifier's output, the noise level of the microphone is about 3 dB greater than the noise contributed by the power amplifier. Both of these noise sources will be swamped out by the acoustical noise level in the acoustical space, however. The electrical noise floor is transformed over to an equivalent noise level of -2 dB(A) at a distance of 20 meters, some 25 dB lower than the acoustical noise floor of a typical space. With this calibration procedure, the maximum output level possible in the house is limited by the dynamic range and nominal operating point established for the DSC260. If more output level is desired, the nominal operating points must be reset accordingly.

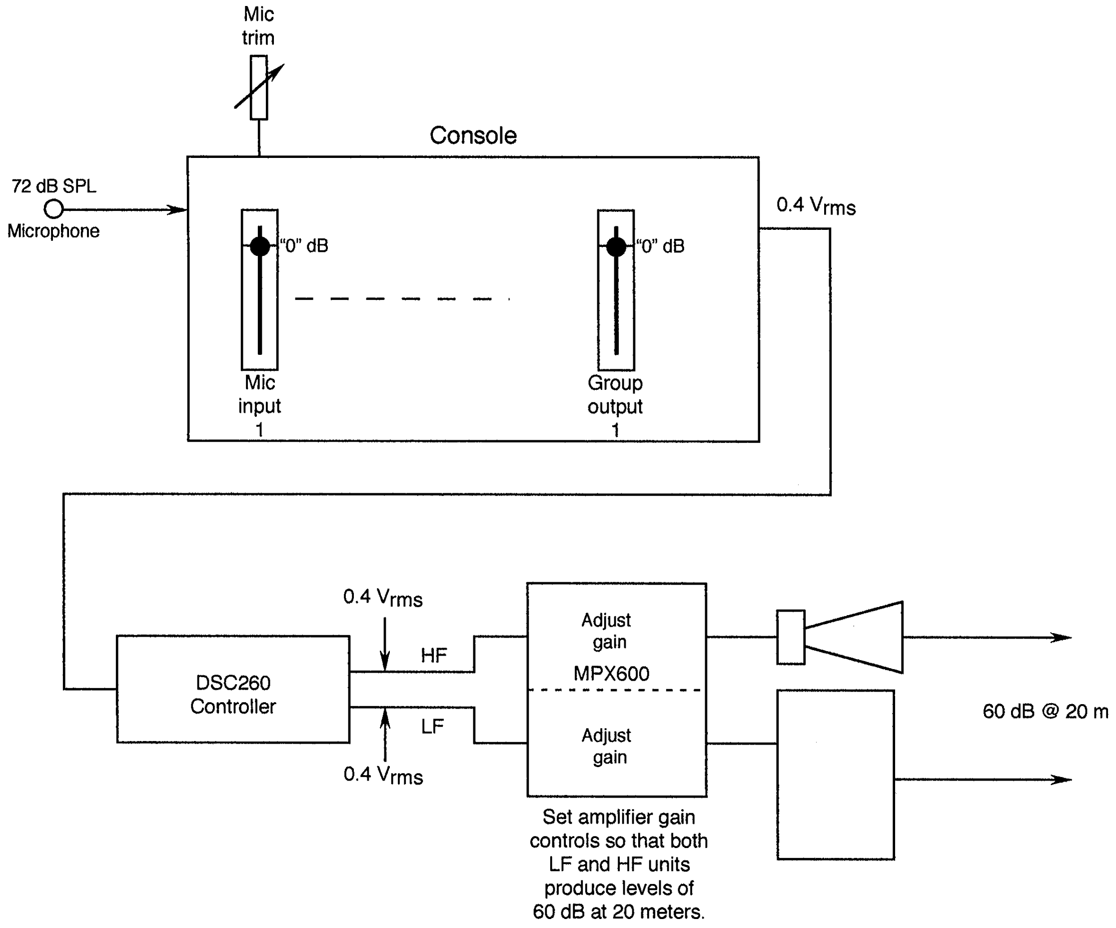

Figure 7-1A. Signal flow diagram for a simple reinforcement system

Level Diagram for a Simple Speech Reinforcement System

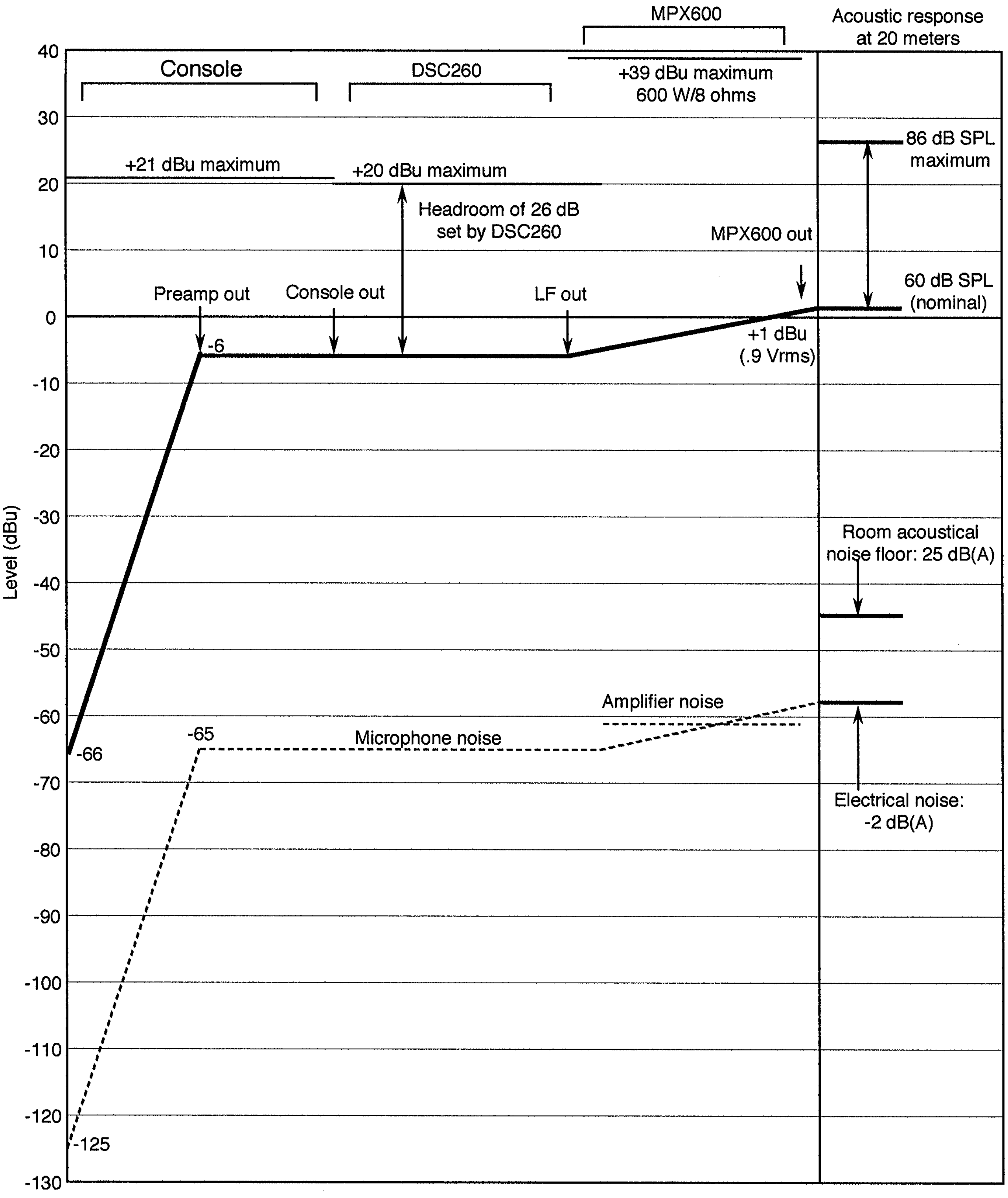

Figure 7-1B. detailed level diagram showing noise levels, nominal operating levels, and maximum output levels of each device

Step Two:

We now have to determine what the nominal operating level of the system should be for the farthest listeners, which we will assume are some 20 meters away from the loudspeaker. Let us further assume that the reverberation time in the room is no greater than 1.5 seconds in the range from 250 Hz to 2 kHz and that the average noise level room is in the range of 25 dB(A). Referring to Figure 7-2, we can see that for an ambient noise level in the 25 dB(A) range, the EAD for a lowered voice would be about 2 meters, or a speech level of about 60 dB SPL.

For a direct field level of 60 dB at a distance of 20 meters, the LF section of the loudspeaker will require a signal input of 0.1 watts (into 8 ohms). In the biamplification mode the HF section will require considerably less than 0.1 watt input in order to reach the desired level at a distance of 20 meters.

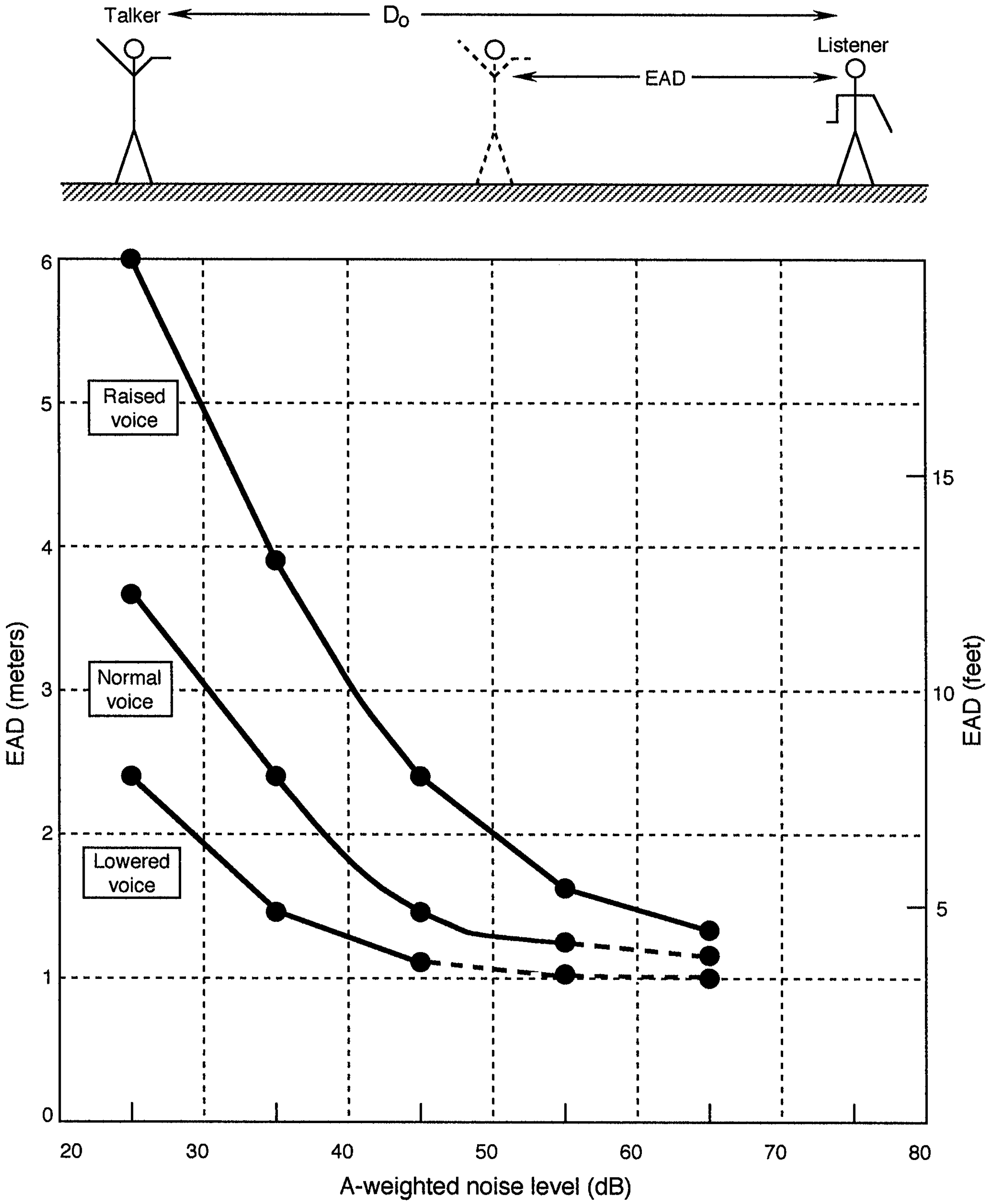

Figure 7-2. EAD versus A-weighted noise levels

Step Three:

For a simulated microphone input of 72 dB SPL, adjust the HF and LF outputs of the DSC260 for nominal levels of 0.4 Vrms. Then, advance the LF gain control on the MPX600 amplifier until a reference level of 60 dB SPL has been reached at a distance of 20 meters. Following this, increase the level of the HF section to reach the same value. Details here are shown in Figure 7-1.

Set up in this manner, there will be adequate headroom, in the console, controller, and power amplifier to handle nominal speech levels as well as levels up to 25 dB higher, should this ever be deemed necessary.

Amplifier and Loudspeaker Power Ratings

A persistent question is: what amplifier power rating do I choose for use with a loudspeaker of a given power rating? The detailed answer is addressed in JBL's Technical Note Volume 1, Number 16A; here, we will only summarize those recommendations:

1. For systems that will be stressed with full amplifier output for long periods of time, we recommend that the amplifier's continuous output rating be chosen to be equal to the loudspeaker's input power rating. Situations of this sort occur primarily in music reinforcement, where a constant, wide-band signal predominates.

2. For applications, such as speech reinforcement, where there is an operator who controls levels carefully, we can confidently recommend an amplifier with output capability that is twice (3 dB greater) than the loudspeaker's continuous rating. The rational here is that peak power requirements, often slightly in excess of the loudspeaker's continuous rating, can be handled with no problem, and it makes sense to provide amplification accordingly.

3. For certain critical monitoring applications, as in recording studios or film postproduction environments, amplifiers may be chosen that can deliver four-times (6 dB greater) power than the loudspeaker can withstand on a long-term continuous basis. The rational here is that the loudspeakers can ordinarily handle midrange and high frequency peaks of short duration that are much higher in instantaneous power than the long-term continuous rating of the loudspeaker.

In most speech reinforcement applications, condition 2 above will apply. Note however that there is no absolute necessity to use the larger amplifier unless high acoustical peak levels are anticipated.

Wire Gauges and Line Losses

In modern sound system engineering it is standard practice to locate power amplifiers as close to the loudspeaker loads as is possible so that line losses become negligible. However, in some applications this is not possible, and the designer must consider line losses, choosing wire gauges that will keep to an acceptable minimum.

Figure 7-3 shows the fundamental calculations. Note that there are actually *two* sources of loss: the loss in the wire itself and the loss due to the impedance mismatch that the long wire run can cause. For example, let us assume an input signal of 8 volts into a nominal load of 8 ohms. With no line losses the power dissipated in the load would be 8 watts (E^2/R_L).

Let us assume that the wire run is 80 meters and that AWG #10 wire is used. Using the table, we can see that the wire resistance in one leg will be:

$$R = 80/300 = .26 \text{ ohms}$$

and the total round trip resistance in the wire run will be twice that value.

The voltage across the 8-ohm load will then be:

$$E_L = 8/\left[8 + (2 \times .26)\right] \times 8 = 7.5 \text{ volts,}$$

and the power dissipated in the load will be:

$$P_L = (7.5)^2/8 = 7 \text{ watts}$$

The power loss is then:

$$\text{Loss (dB)} = 10 \log (7/8) = 0.58 \text{ dB}$$

The general equation for the loss in dB is:

$$\text{Loss dB} = 20 \log\left[\frac{R_L}{R_L + 2R_1}\right]$$

where R_l is the resistance in each of the two wire legs, and R_L is the resistance of the load.

As given here, the loss consists of *two* terms: the actual loss generated in the wire run and the added loss incurred due to the impedance mismatch between the intended load and the actual load.

Good engineering practice dictates that losses at the load be held to 0.5 dB or less.

AMERICAN WIRE GAUGE (AWG)	RESISTANCE PER 300M (1000 ft), COPPER
10	1 ohm
12	1.6
14	2.5
16	4
18	6.3
20	10

SAMPLE CALCULATION:

FIND POWER LOSS IN AN 80m RUN OF AWG NO. 10 WIRE TO AN 8-ohm LOAD.

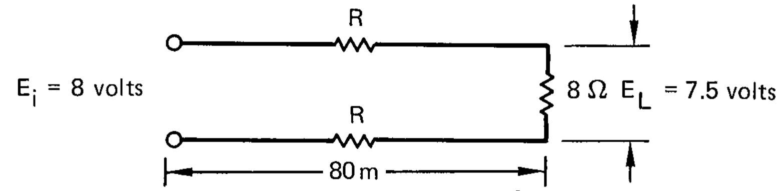

$R = 80/300 \times 1 \text{ ohm} = .26\,\Omega$

$$E_L = \frac{8}{8 + (2 \times .26)} \times 8 = 7.5 \text{ volts}$$

$$P_L = (7.5)^2/8 = 7 \text{ watts}$$

$$\text{dB loss} = 10 \log (7/8) = .58 \text{ dB}$$

Figure 7-3. Calculation of resistance in wire runs

Constant Voltage Distribution Systems (70-volt lines)

Many distribution systems in the United States make use of the 70-volt line for powering multi-loudspeaker paging systems. In Europe the 100-volt line is common. In either system, the full output power of the driving amplifier is available at a line voltage of 70 Vrms or 100 Vrms, respectively.

In placing loads across the line, the design engineer simply keeps a running count of the number of watts of power drawn from the line. There is no need to calculate the aggregate load impedance at any point in the process. When the total number of watts drawn from the line is equal to the power rating of the amplifier, then the line is fully loaded and properly matched.

Figure 7-4 shows details of a 70-volt distribution system. The maximum load on the amplifier is transformed so that the applied voltage will be 70 Vrms. This then will correspond to a total transformed load impedance, Z_L, equal to $5000/P_O$, where P_O is the maximum power output of the amplifier.

Individual loads are placed across the amplifier in parallel using line-to-loudspeaker distribution transformers that have a 70-volt primary and a tapped secondary designated in watts. The system designer (or installer) merely has to keep a running tally of watts drawn from the line, and when the number of watts equals the continuous output power rating of the amplifier, then the system is fully loaded. Ordinarily, no additional loads will be placed across the line, but there is some leeway here.

The alternative to 70-volt distribution is to laboriously keep track of combined load impedances in parallel, a big task. Details of a 70-volt transformer are shown in Figure 7-5.

In Europe, a 100-volt transmission system, derived in a similar manner, is used.

Low Frequency Augmentation — Subwoofers

Whether in the cinema or in open spaces, LF augmentation systems are becoming popular for special effects. For indoor applications many acoustical engineers calculate the reverberant sound pressure level that can be produced by a transducer, or group of transducers, operating continuously over an assigned low frequency band, normally from 25 Hz to about 80 Hz. The equation for determining the reverberant level is:

$L_{REV} = 126 + 10 \log W_A - 10 \log R,$

where W_A is the continuous acoustical power output from the transducer and R is the room constant in m^2.

In using this equation, we assume that the space is fairly reverberant at very low frequencies and that the value of absorption coefficient at 125 Hz (the lowest value normally stated for materials) will be adequate for our purposes.

Some design engineers prefer to make actual direct field calculations for one or more subwoofer units at a distance, say, of two-thirds the length of the enclosed space. In large motion picture spaces, both sets of assumptions yield results that are usually within 5 dB of each other.

The phenomenon of mutual coupling always comes to our aid in increasing the power output of combined subwoofer units. Figure 7-6A shows the

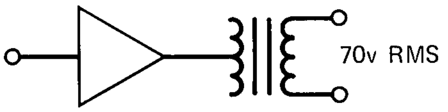

$$P = E^2/Z_L = (70)^2/Z_L$$

$$\therefore Z_L = \frac{5000}{P}$$

POWER	LOAD IMPEDANCE
100w	50 Ω
200	25
250	20
300	16.7

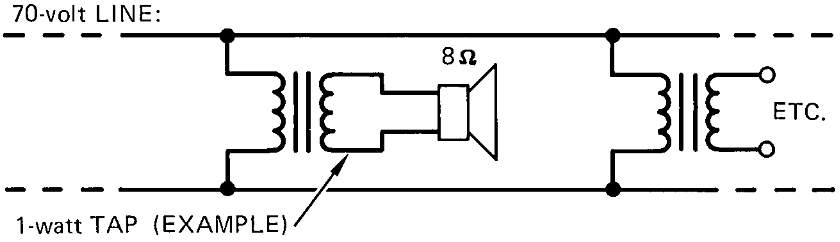

PRIMARY VOLTAGE = 70v

SECONDARY VOLTAGE = 2.83v

PRIMARY LOAD IMPEDANCE = 5000/1 = 5000 Ω

Figure 7-4. Details of a 70-volt transmission system

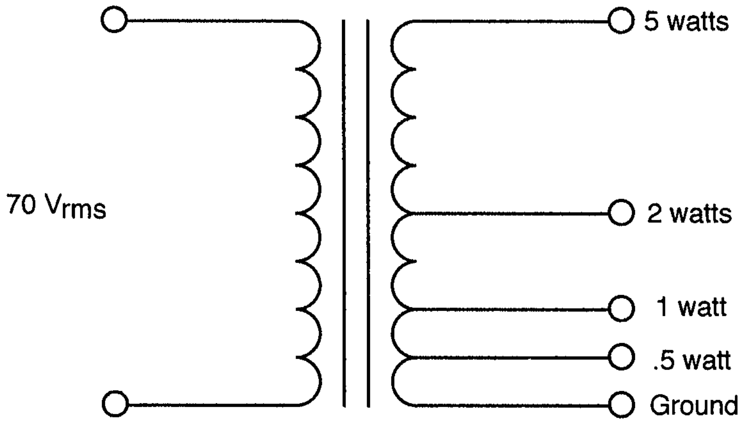

Figure 7-5. Details of a typical 70-volt distribution transformer

transmission coefficient for a direct radiator as a function of cone diameter. The solid curve is for a single unit, and the dotted curve is for two units positioned very close to each other. In addition to the double power handling capability afforded by the two units, the dotted curve shows a 3 dB increase in transmission coefficient at low frequencies. This is due basically to the tendency for the two drivers to behave as a single unit with a larger cone diameter, and hence higher efficiency. Thus, at *B*, we see the relative response of a single woofer (solid curve) compared to two such radiators (dashed curve). Note that the upper frequency transition point for the pair is 0.7 that of the single unit. The more such units we combine, the lower the effective cut-off frequency below which mutual coupling is operant.

As an example, let us pick a large cinema with the following physical parameters:

$V = 14{,}000\ m^3$
$S = 3700\ m^2$
$T_{60} = 1.2$ seconds
$R = 2500\ m^2$

We will use the JBL 2242H LF transducer. Taking into account its power rating and its dynamic compression at full power, we note that its power output in acoustic watts will be:

$$W_A = (W_E \times \text{reference efficiency})10^{-dB/10}$$

where W_E is the transducer's continuous power rating (watts) and -dB is the transducer's power compression at full power.

Substituting the values of W_E of 800 watts, reference efficiency of .004, and power compression of 3.3 dB, we get the value of 15 acoustical watts.

The reverberant level in a space with a room constant of 2500 is then:

$$L_{REV} = 126 + 10 \log 15 - 10 \log 2500 = 104 \text{ dB SPL}$$

We can now construct the following table:

Number of Units	Maximum Level	Power Input
1	104 dB	800 W
2	110 dB	1600 W
4	116 dB	3200 W

We cannot continue this process much beyond that shown here. What happens is that the frequency below which mutual coupling takes place falls below the nominal cutoff frequency of the system, and eventually all we see is a simple 3 dB increase per doubling of elements.

For multiple subwoofers outdoors, it is best to assume that levels fall off according to inverse square law.

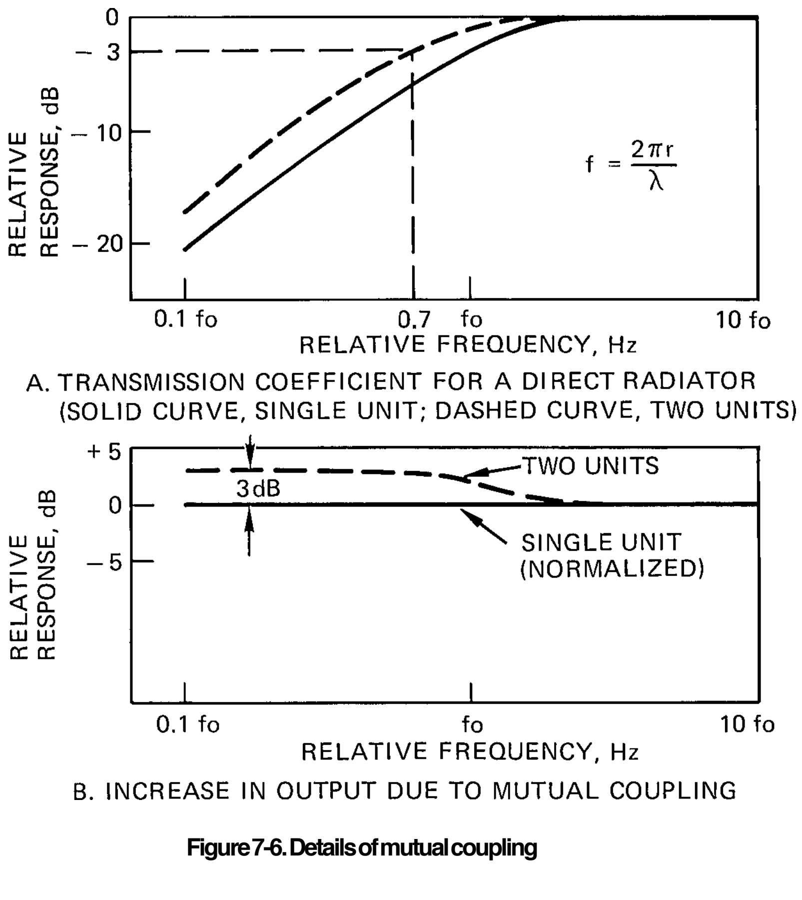

Figure 7-6. Details of mutual coupling

Case Study A: A Speech and Music System for a Large Evangelical Church:

1. Basic Description and Specifications:

The fan shaped architectural design shown in Figure 7-7 is common for modern evangelical churches in that it accommodates many people, all seating positions with good sightlines. The major acoustical problem is likely to be the curved front *fascia* of the balcony and the curved back wall itself. If not properly treated, these surfaces can cause severe reflections back to the platform. In many cases, such spaces are designed with an overabundance of absorbing material, making the room quite dead. There is then a need for a very robust speech-music reinforcement system to provide a feeling of ambience and acoustical envelopment.

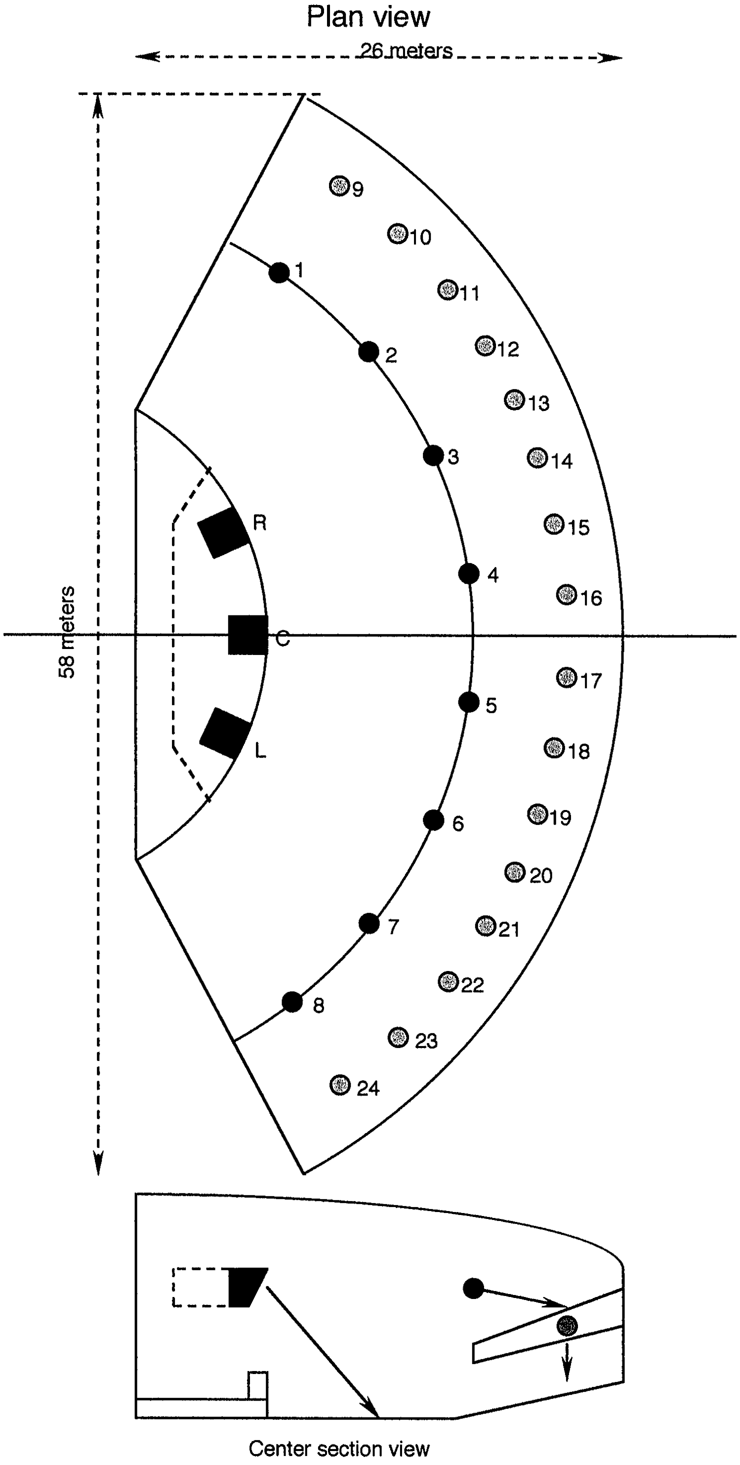

Figure 7-7. Evangelical church, plan and sections views

The system consists of a central array of left, center, and right stereophonic music channels; speech will be reinforced over the center channel only. Delayed coverage for the balcony area will be provided by a ring of seven flown loudspeakers, and under-balcony coverage will be augmented by a ring of fifteen soffit mounted loudspeakers. The main array over the platform should be designed for nominal horizontal coverage in excess of 120 degrees. If a CADP2 analysis shows they are needed, side and front fill loudspeakers may be added to increase coverage in those areas of the main floor.

The main stereo array is intended to cover primarily the main floor and first few rows under the balcony. Coverage of the balcony area will be essentially monophonic, with the same signal fed to all of those loudspeakers.

The main stereo loudspeaker systems should be capable of extended bandwidth at both low and high frequencies. Music levels of 105 dB are expected on the main floor.

2. Exercises:

2.1 Main Arrays:

1. Specify the elements in each of the three main arrays and determine the power needed.

2.2 First Delay Ring:

1. Specify the elements needed, power required, and distribution method.

2.3 Second Delay Ring:

1. Specify the elements needed, power required, and distribution method.

3. Suggested Answers to Exercises:

3.1 Main Arrays.

There are two basic approaches in designing the main arrays. A completely custom system may be assembled with individually fabricated low and mid-frequency enclosures. The benefit in this approach is that the HF components can be kept tightly clustered together with a minimum of interference among them. However, the attendant costs of rigging may make this approach unreasonably expensive.

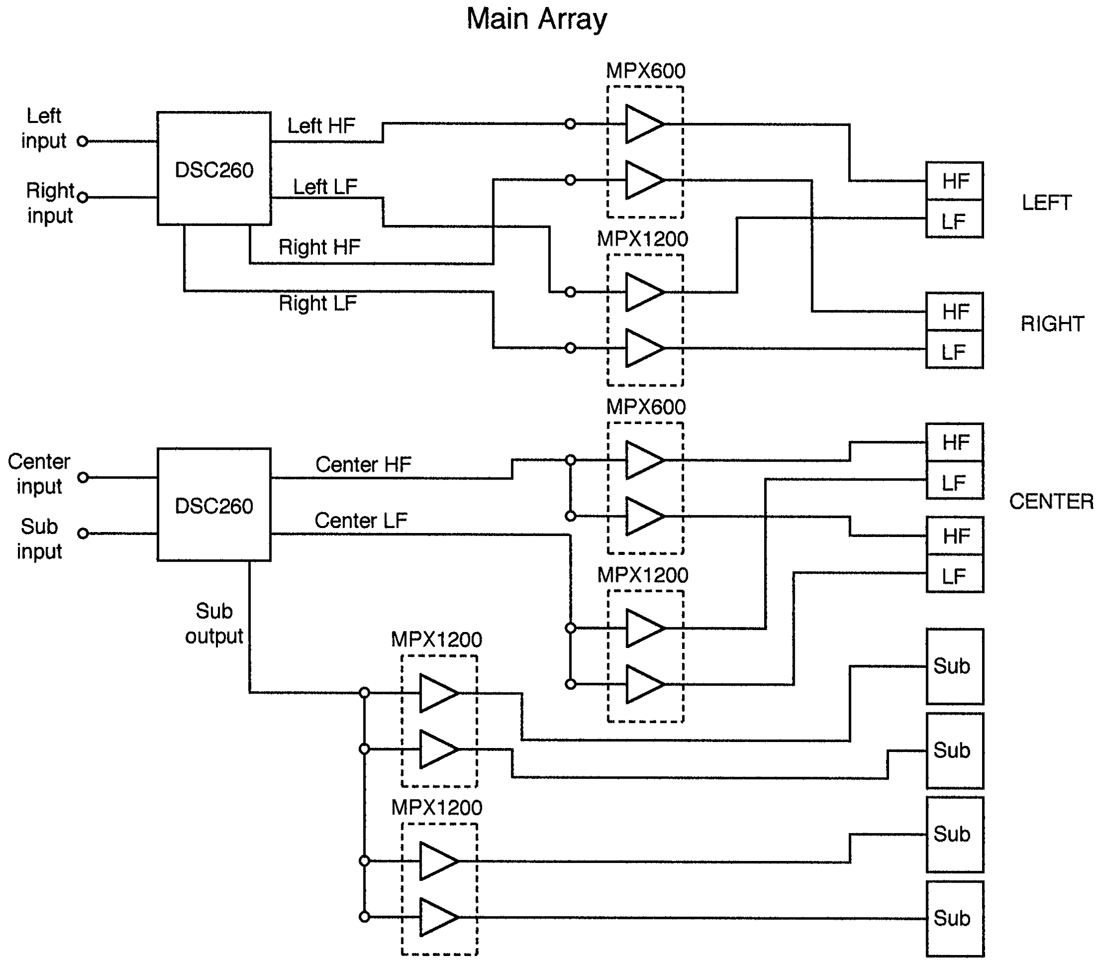

Figure 7-8. Electrical diagram of the main array

The other approach is to use pre-existing building blocks, such as the SP225-9 system. Specifically, four of these systems can be arrayed with sufficient space between them for good stereo presentation and splayed to produce an included coverage angle of 135°. Rigging is integral in the SP Series, so that problem is solved. A center pair of SP225-9 units should be located side by side and splayed along their common back angle to give 120° coverage. This channel is primarily for speech, but may be used as well as a stereo center channel for music. The remaining two SP225-9 units will be used for left and right stereo presentation.

All units will have a nominal downward elevation angle of about 60°, and the average throw to the main floor is 10 meters. Level calculations are as follows:

Level	Power	Distance
100 dB	1 W	1 meter
131 dB	1200 W	1 m
111 dB	1200 W	10 m

In this case, we are powering the two LF units in each SP225-9 as a parallel (4 ohm) load to be driven by one section of a MPX1200 amplifier.

Delay Systems

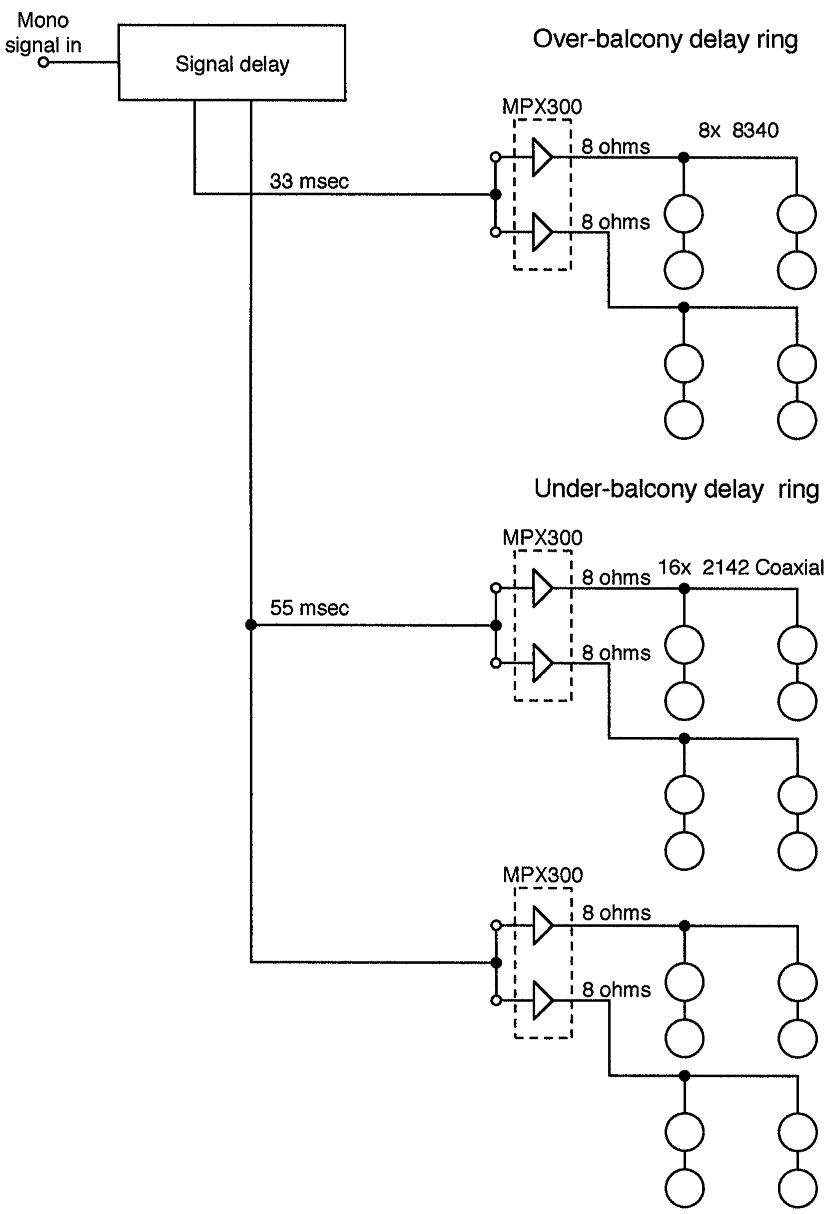

Figure 7-9. Electrical diagram of delayed systems

The three HF sections in each main array should be powered by one section of an MPX600 amplifier (200 watts into 16 ohms).

Each one of the four main arrays should also have an SP128S subwoofer module. These would be powered the same way as the LF sections of the SP128S units. Level calculations are given:

Level	Power	Distance
102 dB	1 W	1 meter
133 dB	1200 W	1 m
113 dB	1200 W	10 m

The electrical diagram for the main array is shown in Figure 7-8.

3.2 Delay Rings:

The first delay ring of loudspeakers should be composed of fairly robust loudspeakers, such as the 8340A. Each one of these eight loudspeakers has a far throw range of about 6 meters and can accommodate 150 watts input. We can calculate the level output of each one as follows:

Level	Power	Distance
96 dB	1 W	1 meter
118 dB	150 W	1 m
102 dB	150 W	6 m

As an ensemble, these eight loudspeakers will provide added high frequency coverage of the balcony seats, ensuring good articulation.

The under balcony soffit system consists of 16 transducers located 2 meters above the seated listener's ear height. The model 2142 has a sensitivity of 97 dB and a power rating of 90 watts. A seated listener directly under one of these transducers, if it is powered by 1 watt, will hear a level of 91 dB. A listener mid-way between a pair of them will hear a level of about 90 dB. The 90-watt per transducer rating means that peak levels of about 110 dB can be developed under the balcony.

Case Study B: A Distributed Speech Reinforcement System for a Large Liturgical Church

1. General Information and Basic Performance specifications:

The system to be studied here is typical of what may be found in just about every large religious edifice in Europe and in many large cities in the U. S. The plan and front section views are shown in Figure 7-10. The building under consideration here has an internal volume of 12,000 cubic meters and surface area of 4000 square meters. A mid-band empty house reverberation time of 2.5 seconds indicates a value of 800 square meters of absorption units ($S\bar{a}$), as extrapolated in Figure 5-10.

Our major concerns with a system in such a space as this are the net speech direct-to-reverberant ratio and the reverberation time itself. Each loudspeaker will contribute to the overall reverberant level behind the amplified speech, and our first step is to determine the number of loudspeakers that will be required to cover the entire seating area. Studying the plan view of the building, we can see that 8 loudspeakers will cover the transept seating, while 10 systems will cover the nave seating.

2. Analysis:

The longest "throw" that will be required of any single loudspeaker is to cover a listener seated at the center aisle, a distance of about 7 meters. Let us now specify a JBL Control 28 and power it to produce a level of 85 dB at a distance on-axis of 7 meters.

We can do this directly by setting up the familiar level/power/distance chart as follows:

Level	Power	Distance
92 dB	1 W	1 meter
75 dB	1 W	7 m
85 dB	10 W	7 m

We now want to make an estimate of the reverberant level that will exist in the room when the direct sound from a single loudspeaker at the listener is 85 dB. To do this, we must determine the efficiency of the loudspeaker. Taking data from the Control 28 specification sheet, and averaging the DI over the 200 to 2000 Hz range, we now use the following equation:

$$\text{Sensitivity (1 W @ 1 m)} = 109 + DI + 10 \log \text{Efficiency}.$$

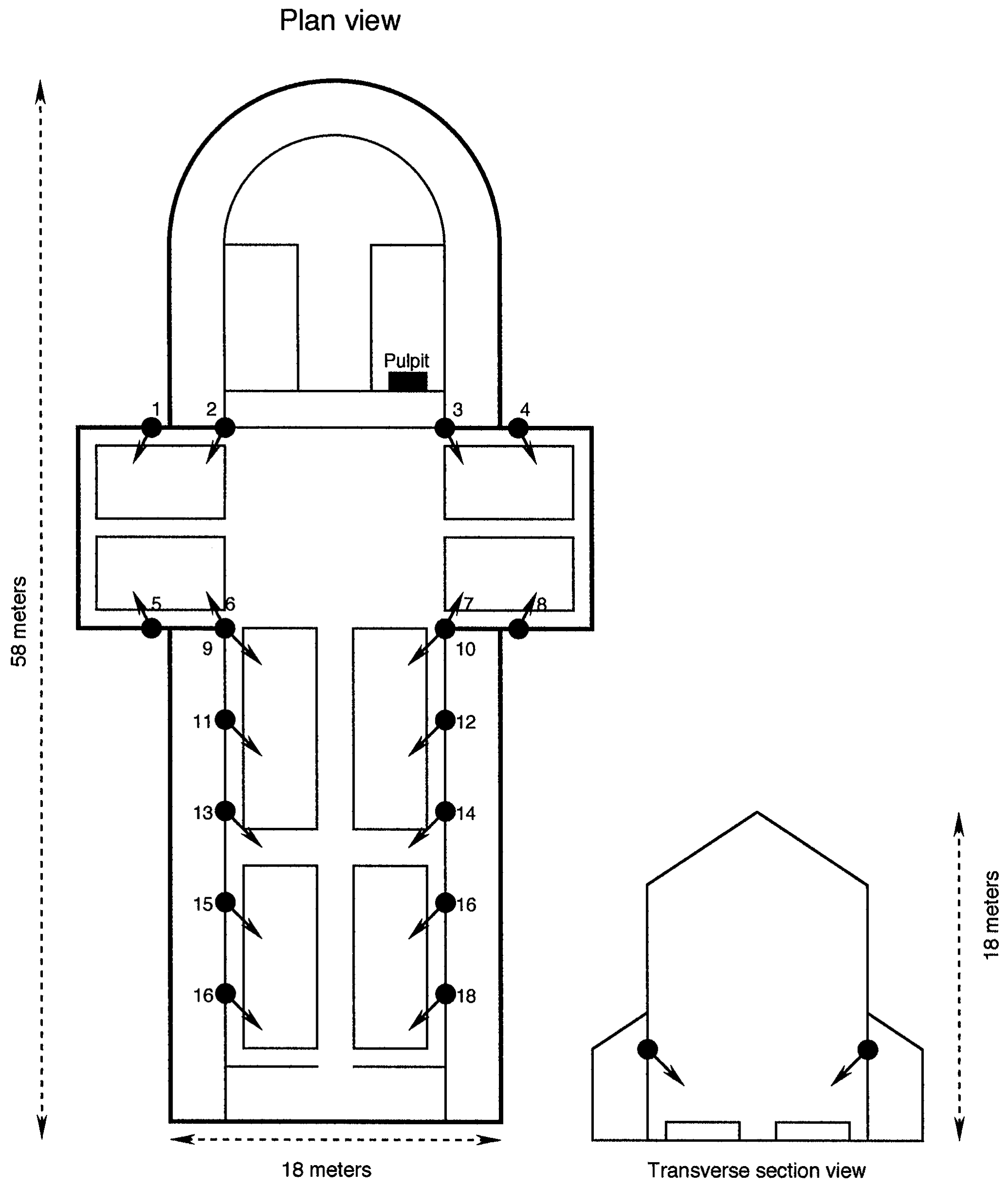

Figure 7-10. Plan and front elevation views of large liturgical church

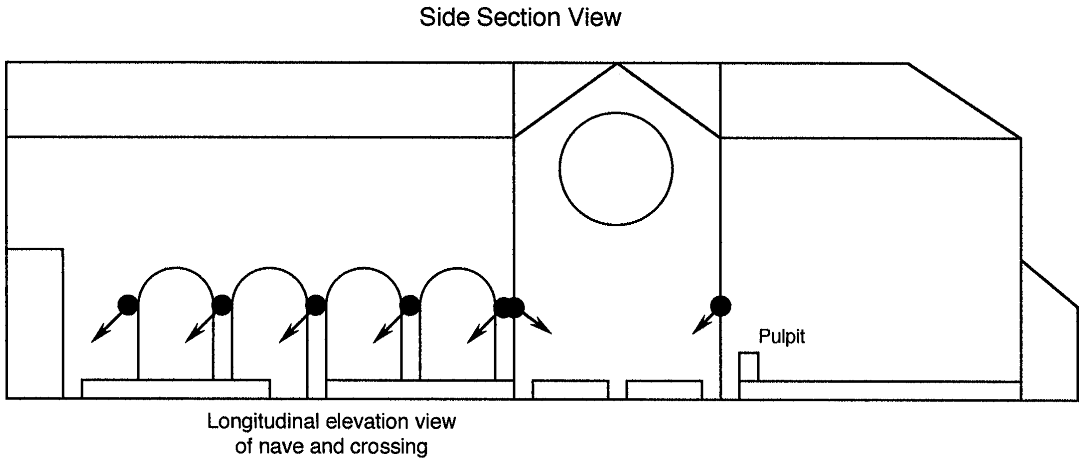

Figure 7-11. Side elevation view of large liturgical church

Entering values and rearranging:

10 log Efficiency = 92 -109 - 5 = -22

The efficiency is then $10^{-22/10} = 10^{-2.2} = .63\%$

The total contribution to the reverberant field will be from all 18 loudspeakers working at once. We can then calculate the radiated acoustical power as: 18 x 10 x 0.0063 = 1.134 acoustical watts. Here, 18 is the number of individual loudspeakers, 10 W is the electrical power applied to each of them, and 0.0063 is the efficiency.

For the next step in the analysis we need to determine the resulting reverberant level in the room.

$$L_{rev} = 126 + 10 \log W_A - 10 \log R$$

In relatively live spaces, $S\bar{a}$ and R are virtually identical; therefore,

$$L_{rev} = 126 - 0.6 - 29 = 96 \text{ dB SPL.}$$

We have now reached a point in our analysis where we can estimate the overall system performance regarding speech intelligibility. We know the following:

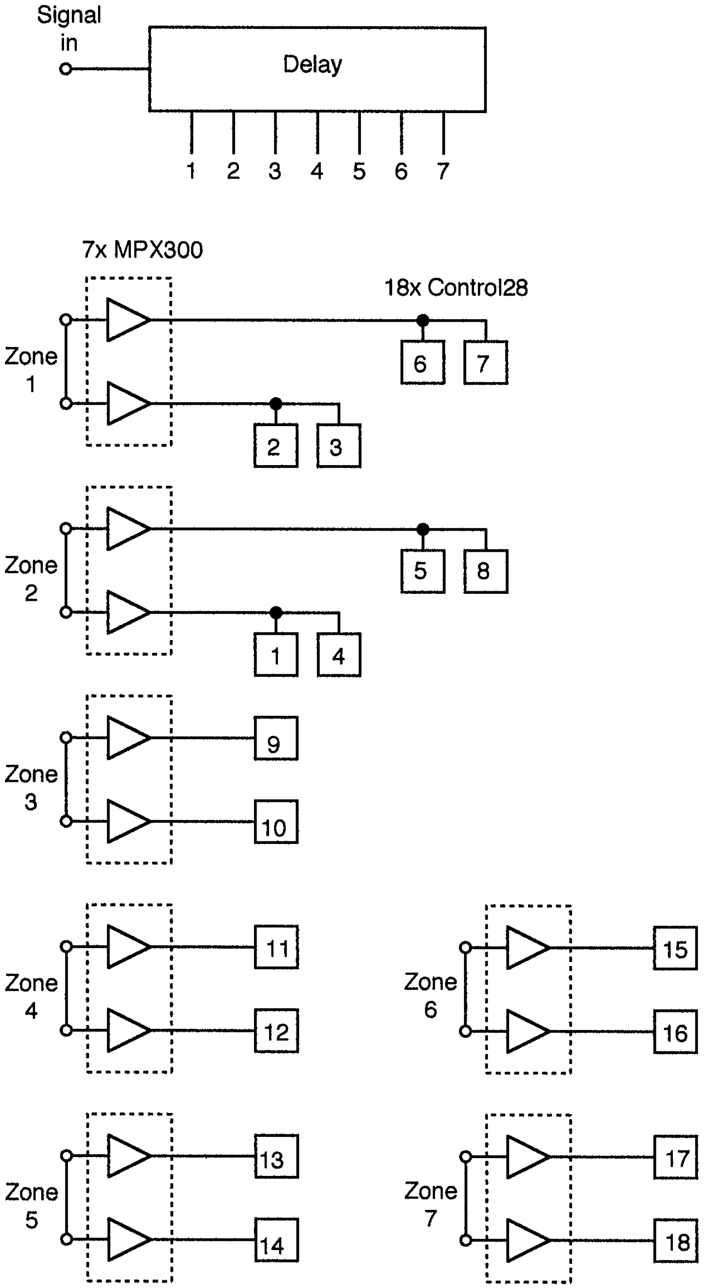

Figure 7-12. Electrical diagram of delay zoning system

1. That when a single loudspeaker produces a level of 85 dB SPL at the farthest listener, the resulting reverberant level is 96 dB SPL.

2. That the mid-band reverberation time in the room is 2.5 seconds.

As our final step in the analysis, we can check the probable system speech intelligibility performance, according to Peutz' Articulation loss of consonants (Al_{cons}) by means of the chart shown in Figure 6-13.

Locating a direct-to-reverberant ratio of -11 dB along the bottom axis, and then moving up to the horizontal line corresponding to a reverberation time of 2.5 seconds, we see that the system's performance is slightly above the borderline of 15% Al_{cons}. This indicates that we have barely succeeded in our design goal of acceptable performance. In other words, our analysis has shown that we have marginal acceptability in terms of speech intelligibility.

In reality, there are three factors that will work in our favor:

1. The Peutz criteria are based on acoustical relationships at 2 kHz. With mid-band (500 Hz) reverberation at 2.5 seconds we can reasonably assume that reverberation time at 2 kHz will be about 2.2 seconds due to excess air attenuation, as can be read from Figure 5-13.

2. We have not yet considered that the surface area (as opposed to the average absorption coefficient) on which most of the initial acoustical power is aimed is more absorptive than the average absorption coefficient would indicate. At 2 kHz, the audience area will have an absorption coefficient conservatively estimated at about 0.5, and this indicates that the actual reverberant level generated by the reinforcement system could be a good 3 dB less than our calculations indicate. This would easily move our data point in the graph of Figure 6-13 very close to the "GOOD" zone. Of course we must take into account the actual number of persons present in the audience area before this assumption can be made. On any given Sunday, if all the attendees at a service can be coaxed into the front pews, the loudspeakers behind them are unnecessary and can be turned off, further reducing the level of the reverberant field.

3. The final factor working in our favor would be the reduction of reverberation time in the space due to the presence of the congregation. Remember that the reverberation time of 2.5 seconds is for the empty room.

3. Delay Zoning:

Suggested delay settings are:

Zone 1. Loudspeakers 2, 3, 6, and 7	10 msec
Zone 2. Loudspeakers 1, 4, 5, and 8	22 msec
Zone 3. Loudspeakers 9 and 10	40 msec
Zone 4. Loudspeakers 11 and 12	55 msec
Zone 5. Loudspeakers 13 and 14	70 msec
Zone 6. Loudspeakers 15 and 16	85 msec
Zone 7. Loudspeakers 17 and 18	100 msec

4. General comments:

The system described in this section emphasizes the complex inter-relations between acoustics and electroacoustics that are inherent in basic sound reinforcement design in large, live spaces. We strongly urge that all of the basic relationships presented here be carefully studied and understood. The fundamental principles we would like to stress are:

1. Whenever possible, use distributed loudspeakers that cover the intended seating area, but that have rapid cutoff beyond their nominal coverage angles; in other words, keep the on-axis DI as high as possible consistent with required coverage.

2. Try to minimize the longest throw distance within a given loudspeaker zone. Loudspeakers have been placed in overhead chandeliers in the attempt to do this. Pewback systems take this approach to the limit.

3. Seat the congregation toward the front of the room and turn off unnecessary loudspeakers.

4. Many large spaces were designed during a time when few people cared about speech intelligibility, and many liturgical spaces are simply too live for modern requirements. A careful assessment should be made here, and no live liturgical space should be altered acoustically without the advice and counsel of an experienced acoustical consultant.

Case Study C: Specifications for a Distributed Sound System Comprising a Ballroom, Small Meeting Space, and Social/Bar Area.

1. General Information and Basic Performance Specifications:

1.1 Ballroom Description: The size of the space is 33 meters long, 22 meters wide, and 8 meters high. A stage is located at the center of one short side, and the room may be used for banquets, displays, and social events such as dancing.

A distributed (ceiling) system will be used for general speech/music purposes, as well as amplification of stage events. For this purpose the system should be zoned for delay. Reinforced levels up to 100 dB SPL will be expected, and coverage should be uniform within 1.5 dB up to a frequency of 2 kHz. The space is normally carpeted, except for dancing. Reverberation time is minimal.

1.2 Meeting Space Description: This space is typical of many that will be found in convention and meeting areas. The size is 8 meters by 5 meters and 3 meters high. A distributed ceiling system is to be designed, uniform within 1.5 dB up to 2 kHz. Normal maximum levels are expected to be 85 dB SPL.

1.3 Social Area: This space is of irregular shape, as shown in the diagram. A foreground stereo music system is to be specified for this space; no paging will be required. The system should be capable of producing levels of 85 dB SPL. There is also a disco/dance floor area, and a four-loudspeaker installation should provide levels of 105 dB at the center of the dance floor.

2. Exercises:

Study the attached figures that detail the layout of distributed systems in general, and pick either the square or hexagonal layout.

2.1 Ballroom System:

1. Determine quantity and placement of ceiling loudspeakers that will meet the specification.

2. Determine the power allocation for each loudspeaker and describe the power distribution system (70-volt or low-Z).

3. Determine the minimum number of workable zones for signal delay for stage events.

2.2 Meeting Space System:

1. Determine the model loudspeaker required and the spacing density in the ceiling.

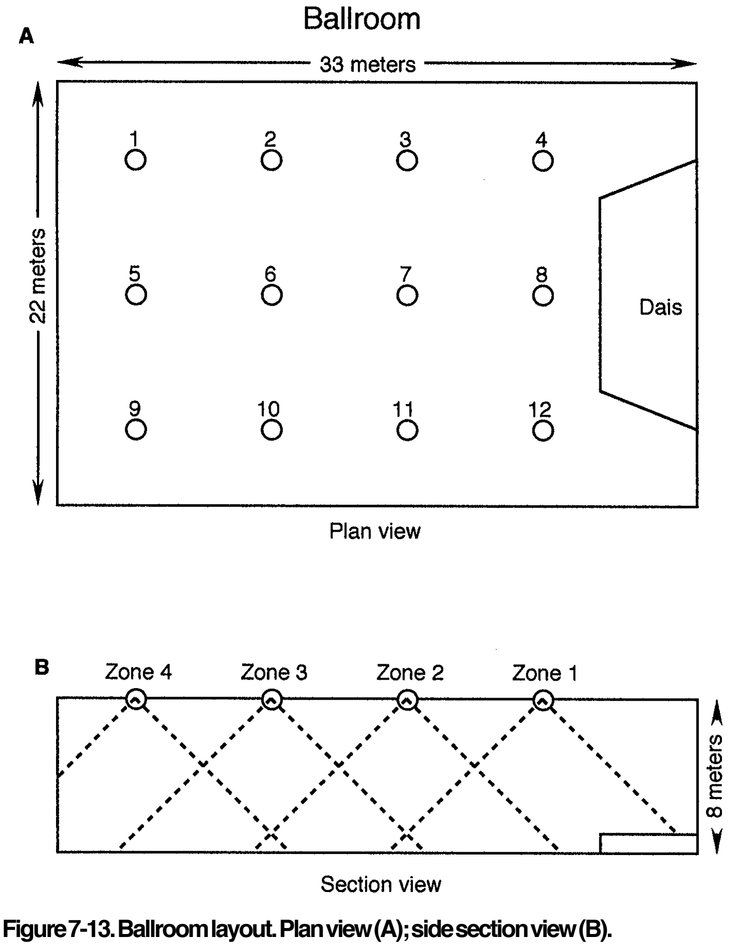

Figure 7-13. Ballroom layout. Plan view (A); side section view (B).

2. Determine the power allocation for each loudspeaker.

2.3 Social Area System:

1. Suggest a stereo layout of loudspeakers that will provide all patrons with satisfactory sound.

2. Determine power requirements and distribution method.

3. Specify disco components that will produce a level of 115 SPL dB in the middle of the dance floor.

3. Answers to Exercises:

3.1 Ballroom System:

1. Use the square array, with center-to-center overlap. Reasons: results in easier zoning requirements and fits the rectilinear design of the room better. Designing for seated ear height (1 meter) results in 12 loudspeakers.

2. Use JBL 2155 coaxial loudspeakers. With sensitivity of 102 dB and power rating of 150 watts, a

Signal flow diagram for Ballroom System:

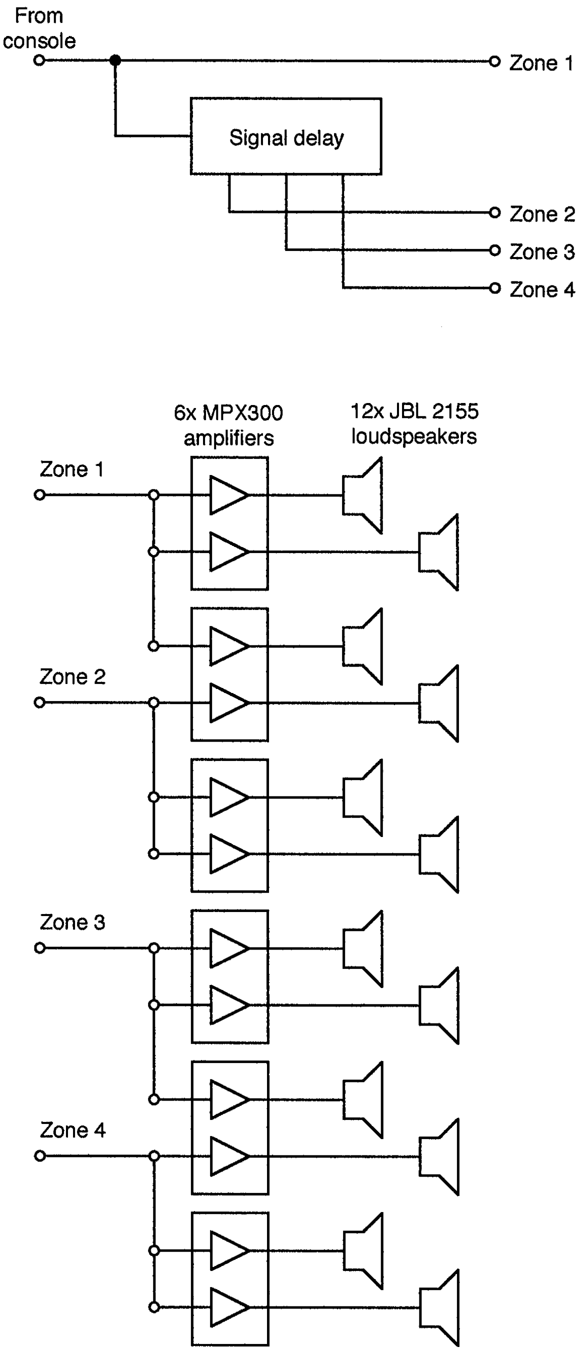

Figure 7-14. Ballroom system, signal flow diagram.

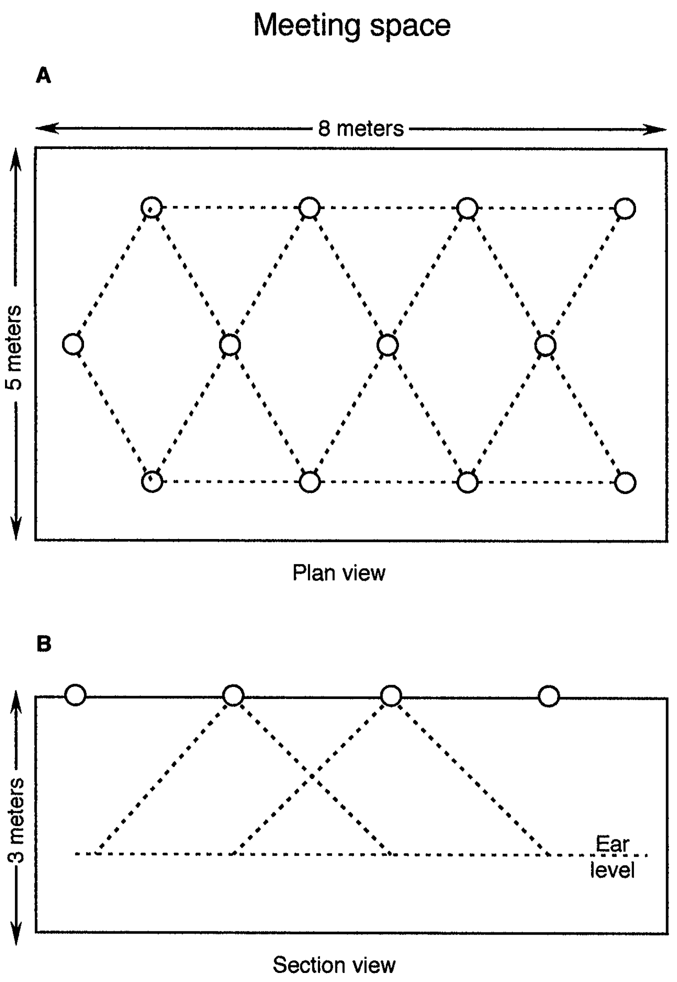

Figure 7-15. Meeting space layout. Plan view (A); side section view (B)

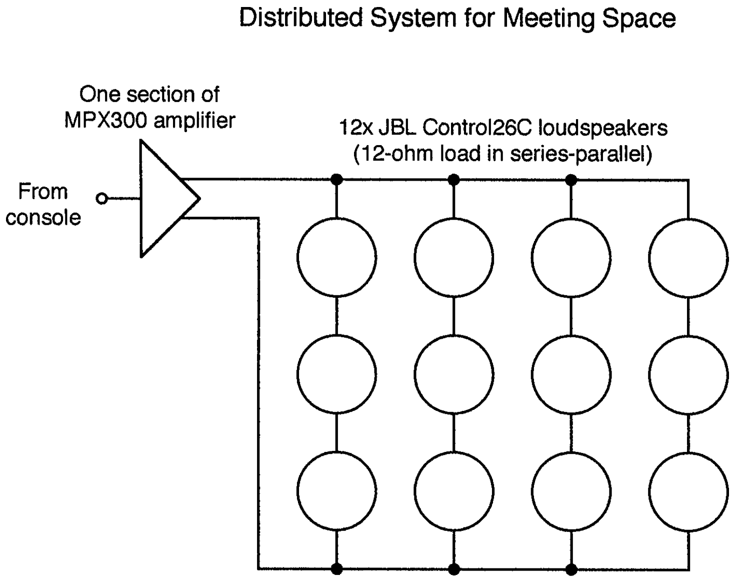

Figure 7-16. Meeting space system, signal flow diagram.

single loudspeaker will, at a distance of 7 meters, produce a level of 105 dB. The added contribution of the eight neighboring loudspeakers will increase this by 3 dB, making a maximum level capability of 108 dB. Level variations will be 1.4 dB.

Because of the wide-band capability of the loudspeakers and relatively high power required, a low impedance distribution system should be used. Each 8-ohm loudspeaker should be driven from a section of a JBL MPX 300 amplifier, making a total of 6 amplifiers. This will provide 200 watt capability into each loudspeaker, which will more than exceed the specification.

JBL Professional provides a program for determining layout density for distributed ceiling loudspeakers. It is called Distributed System Design, version 1.1, and runs on Windows 95 and is available from JBL Professional.

3. Zoning requirements: Measure the average distance from center stage to a center listening position directly under each zone. Subtract from that the value of 7 meters. For each meter difference, calculate 3 milliseconds of delay:

Zone	Difference	Delay
1	negligible	0 msec
2	12 meters	36 msec
3	20 meters	60 msec
4	26 meters	78 msec

In normal cases, the calculated delay values will have to be adjusted slightly on-site for best overall sound quality.

3.2 Meeting Room System:

1. Use the hexagonal array, with center-to center overlap, for best coverage. Twelve loudspeakers will be required, and the JBL Control 26C/CT will be specified because of its nominal coverage angle of 110°. With a sensitivity of 89 dB, one watt input will produce a level of 83 dB at a distance of 2 meters (ear height). With one watt fed to the six nearest neighboring loudspeakers, the level will increase to 87 dB, which is 2 dB higher than the design requirement.

It is obvious that normal usage will require only about one watt per loudspeaker. However, we should provide the system with a nominal 10 dB headroom factor for undetermined applications. The total power in this case would be 120 watts, and a single section of a JBL MPX300 amplifier, operating in series-parallel, would more than meet this requirement. The resulting load impedance of 12 ohms could easily accept 120 watts from one section of the MPX300 amplifier.

3.3 Social Area System:

1. The foreground stereo system is shown as alternating L and R loudspeakers around the main bar area. The JBL Control 5 would be a good candidate for this application. In order to see if 12 of the units can meet the specification, we will pick a point midway in the room (marked X) and sum the individual levels of the loudspeakers at that point. Taking the 1-watt, 1 meter sensitivity as a reference point, we can set up a table as follows for summing the individual contributions:

Spkr	Distances	S	-	20 log Dist	=	Net level			
1	10	89	-	20	=	69			
							>73		
2	8	89	-	18	=	71			
								>77.2	
3	7	89	-	17	=	72			
							>74.5		
4	8	89	-	18	=	71			
									>81
5	8	89	-	18	=	71			
							>75.7		
6	6	89	-	15	=	74			
								>76.3	
7	5	89	-	14	=	72			
							>77.5		Total: 82 dB
8	6	89	-	15	=	74			
9	8	89	-	18	=	71			
							>74.5		
10	7	89	-	17	=	72			
								>77.5	>77.5
11	8	89	-	18	=	71			
							>74.5		
12	7	89	-	17	=	72			

The total level at the test position is thus 82 dB when all 12 loudspeakers are powered with 1 watt, or 85 dB with 2 watts per loudspeaker. With 20 watts per loudspeaker, we would have a comfortable 10 dB margin over our target value of 85 dB SPL. The system will be "coasting" most of the time, and a single stereo amplifier, with loads wired in series-parallel, will suffice.

2. Disco system. There are a number of possibilities here. A very high-end approach would be to specify two JBL 4892 Array Series systems at each corner. They should be mounted near the ceiling and angled down so that the horns point toward the center of the dance floor.

The 4892 is a biamplified system, and its overall sensitivity of 98 dB is limited by its LF section. The LF power rating is 600 watts. The distance from each corner to the center of the dance floor is 7 meters:

Level	Power	Distance
98 dB	1 W	1 meter
126 dB	600 W	1 m
109 dB	600 W	7 m

A total of 8 4892 systems would increase the output by 9 dB, producing level capability of 118 dB at the center of the dance floor. The amplifier requirement would be 4 MPX600 units and 4 MPX300 units. Note carefully that the MPX600 has a maximum output capability of 400 watts into 8 ohms. This is approximately 2 dB less than 600 watts, and we would have to derate the system's overall output capability by that amount.

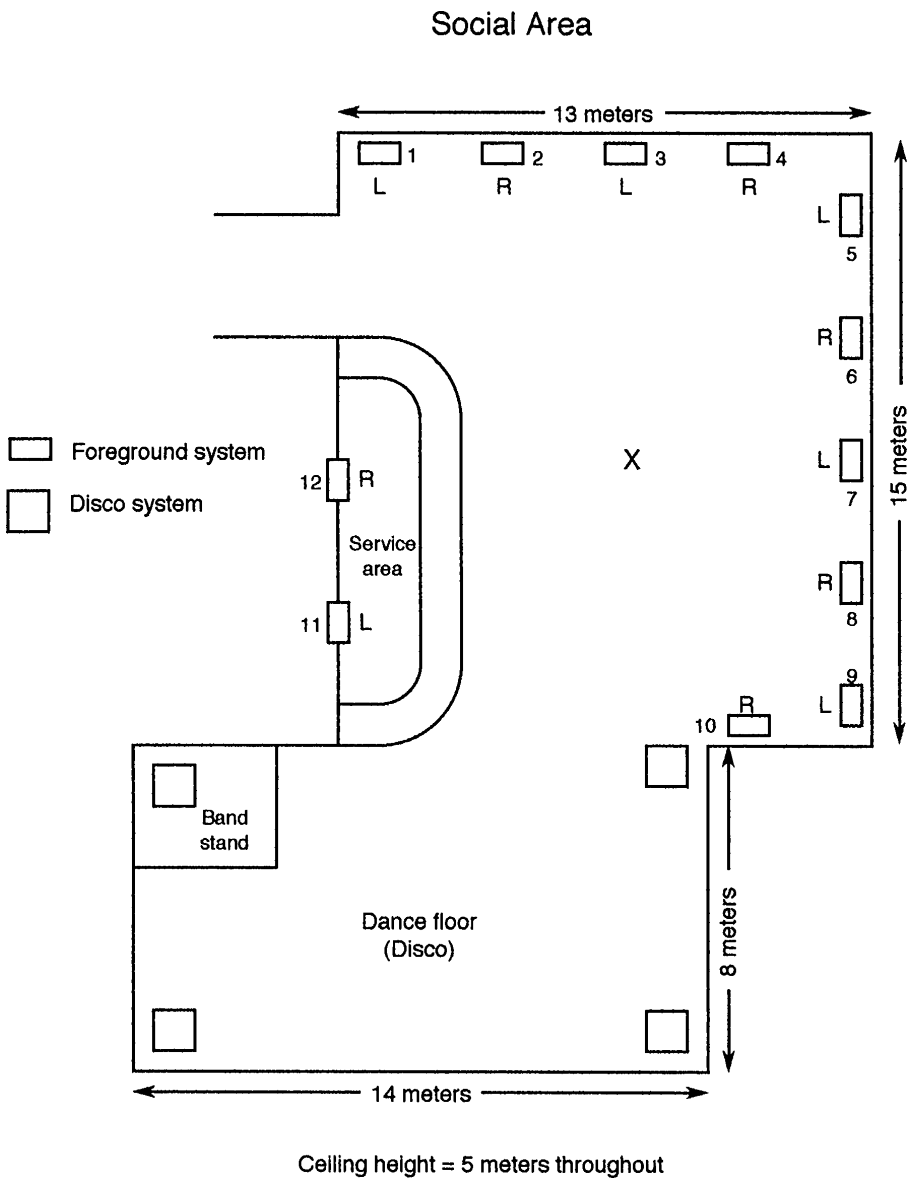

Figure 7-17. Plan view of social area and disco area.

For a stereo system, we would need one DSC260 digital controller for frequency division and other signal processing.

Subwoofer requirements can be met with four (one in each corner) JBL 4645B systems. Drive requirements would be two MPX1200 amplifiers and one section of a DSC260 controller. The amplifiers can deliver 800 watts continuous power per channel into 8 ohms. With their half-space reference efficiency of 2.1%, the four subwoofer systems can produce a total power of 60 acoustic watts.

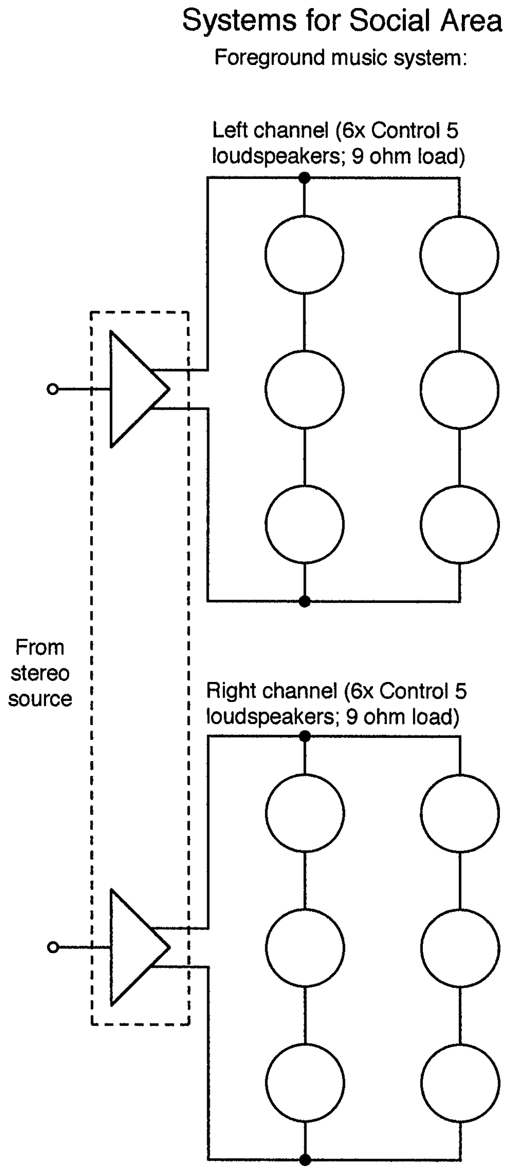

Figure 7-18. Social area system, signal flow diagram.

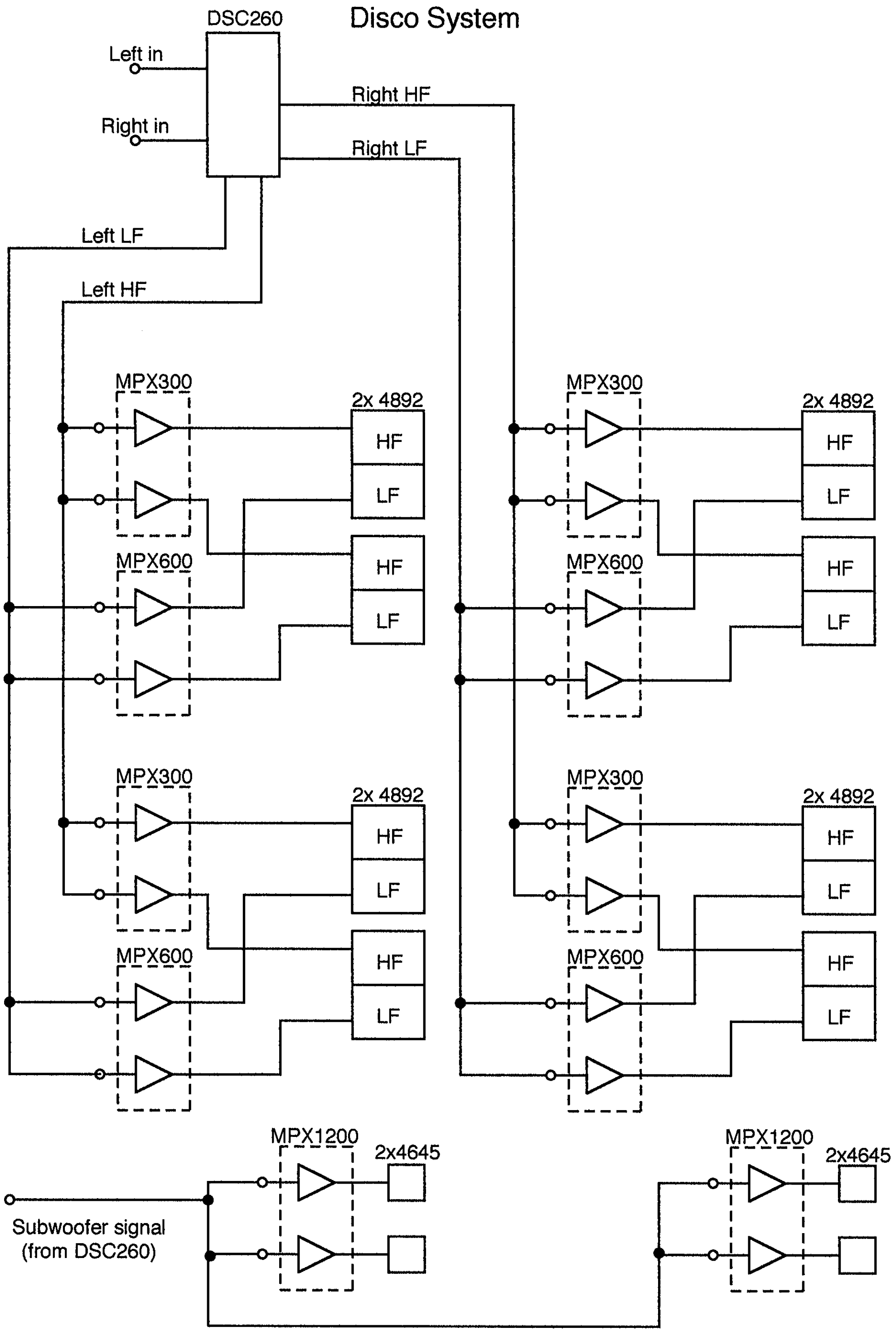

Figure 7-19. Disco system, signal flow diagram.

Recommended Reading:

Books and Anthologies:

1. D. and C. Davis, *Sound System Engineering*, second edition, Howard F. Sams, Indianapolis, 1987.

2. J. Eargle, *Electroacoustical Reference Data*, Van Nostrand Reinhold, New York, 1994.

3. Various, *Sound Reinforcement*, an anthology of articles on sound reinforcement from the Journal of the Audio Engineering Society, volumes 1 through 26. (Available from the AES)

Papers:

4. C. P. and R. E. Boner, "The Gain of a Sound System," *J. Audio Engineering Society*, volume 17, number 2 (1969).

5. H. Haas, "The Influence of a Single Echo on the Audibility of Speech," *J. Audio Engineering Society*, volume 20, number 2 (1972).

6. H. F. Hopkins and N. R. Stryker, "A Proposed Loudness-Efficienty Rating for Loudspeakers and the Determination of System Power Requirements for Enclosures," *Proceedings of the IRE*, March 1948.

7. C. T. Molloy, "Calculation of the Directivity Index for Various Types of Radiators," *J. Acoustical Society of America*, volume 20, pages 387-405 (1948).

8. V. M. A. Peutz, "Articulation Loss of Consonants as a Criterion for Speech Transmission in a Room," *J. Audio Engineering Society*, volume 19, number 11 (1971).

9. V. M. A. Peutz, "Quasi-steady-state and Decaying Sound Fields," *Ingenieursblad*, volume 42, number 18 (1973, in Dutch).

10. Various, "Loudspeaker Arrays — Design and Performance," *J. Audio Engineering Society*, volume 38, number 4 (1990).

JBL Professional
8500 Balboa Blvd.
Northridge, CA 91329 U.S.A.
www.jblpro.com

© 1999 JBL Professional
Printed in U.S.A.
SND DES MAN99
rev. B
A Harman International Company